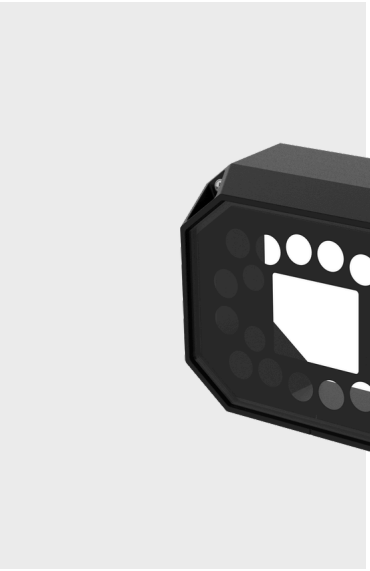

SPF-BCB0

BCR Camera Clear Filter Cover

Key Features

- Color : Black
- Material : PC(Polycarbonate)
- Mount Screw size : Cross recessed head screw(M3)
- Cover Glass Type : Clear
- Supported products : TNS-7000M

Design and specifications are subject to change without notice. The latest product information / specification can be found at HanwhaVision.com
Hanwha Vision is formerly known as Hanwha Techwin.

© Hanwha Vision CO., LTD. All rights reserved.

SPF-BCB0

BCR Camera Clear Filter Cover

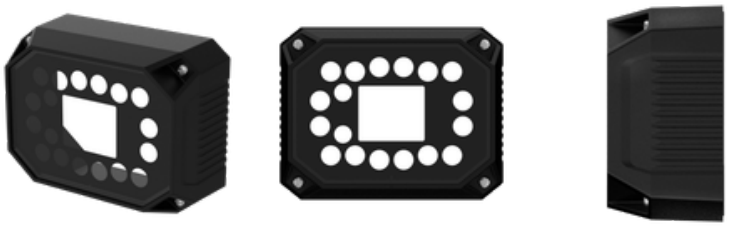

Specifications

Mechanical

Color	Black
Material	PC(Polycarbonate)
Cover Glass Type	Clear
RAL code	RAL9005
Product dimensions / weight	W101.2mm * H78.2mm * D42mm / 70g
Mount Screw size	Cross recessed head screw, M3
Supported products	TNS-7000M

Design and specifications are subject to change without notice. The latest product information / specification can be found at HanwhaVision.com
Hanwha Vision is formerly known as Hanwha Techwin.

© Hanwha Vision CO., LTD. All rights reserved.

SPF-BCB0

BCR Camera Clear Filter Cover

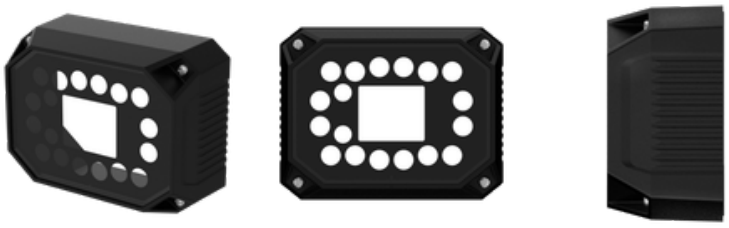

CAD

Unit: mm [inch]

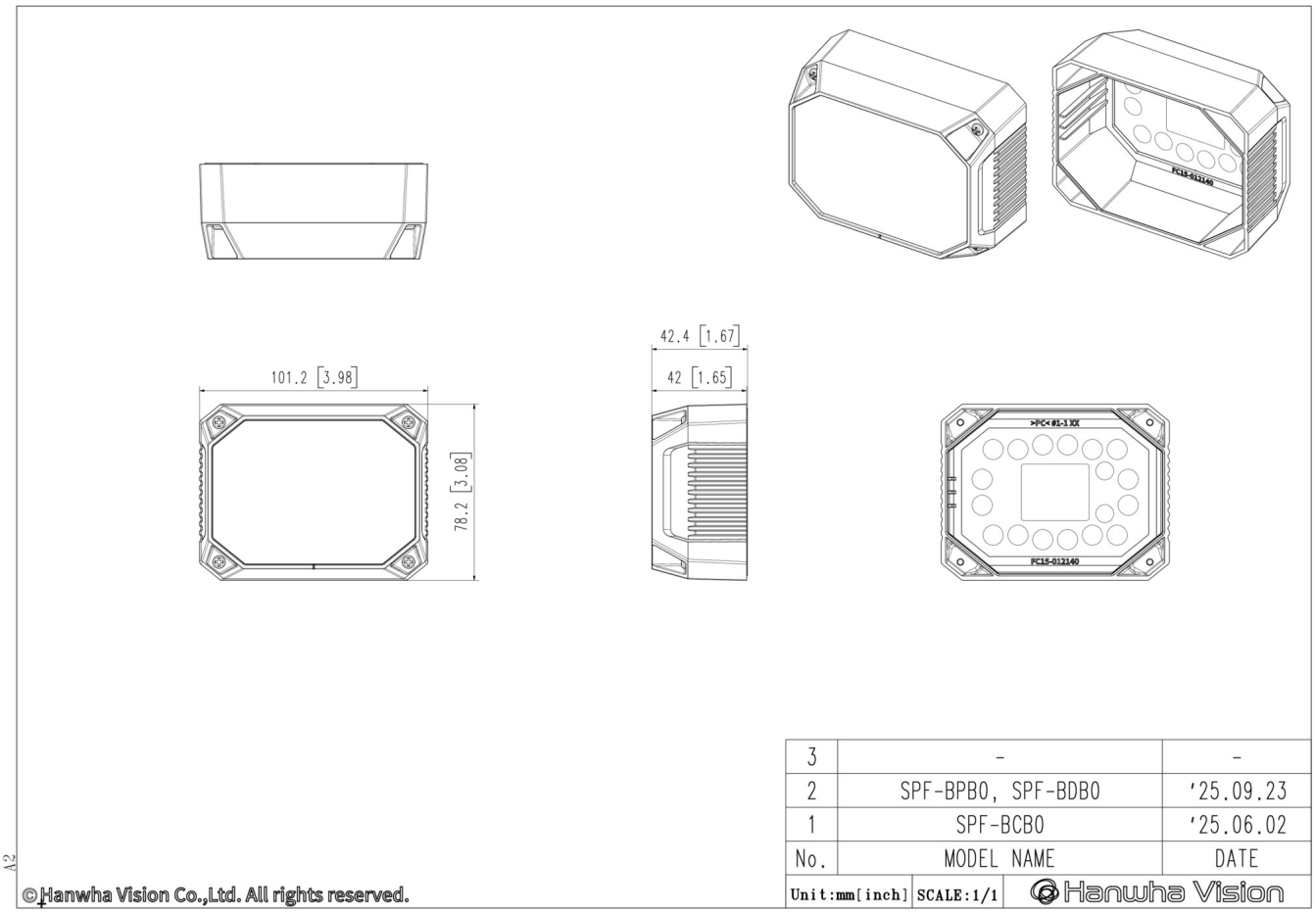

Design and specifications are subject to change without notice. The latest product information / specification can be found at HanwhaVision.com
Hanwha Vision is formerly known as Hanwha Techwin.

© Hanwha Vision CO., LTD. All rights reserved.