

SPI-BBM0

Accessorio modulo LED blu per obiettivo da 12 mm

Key Features

- Modulo LED blu per fotocamera BCR 3MP, disponibile con obiettivo da 12mm
- Consumo energetico: 6.9 W
- Quantità LED: 16EA
- IP66/IP67 (la fotocamera e la copertura frontale devono essere assemblate)
- Temperatura / umidità di funzionamento: -40°C~+55°C / 0~95% RH
- Prodotti supportati: TNS-7000M
- Obiettivo compatibile: SLM-5M12

Design and specifications are subject to change without notice. The latest product information / specification can be found at HanwhaVision.com
Hanwha Vision is formerly known as Hanwha Techwin.

© Hanwha Vision CO., LTD. All rights reserved.

SPI-BBM0

Accessorio modulo LED blu per obiettivo da 12 mm


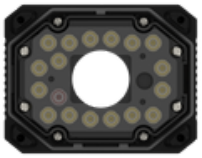


Specifications

Certificazioni	
Temperatura / Umidità di esercizio	-40°C~+55°C / 0~95% RH
Temperatura / Umidità di stoccaggio	-40°C ~ +60°C / Less than 95% RH
Ambientali	FCC, UL, CE, KC, IEC 62471\ IP66/IP67(camera and front cover must be assembled)
Elettrico	
Tensione di ingresso	24 VDC ± 10%
Consumo energetico	6.9 W
Meccanico	
Dimensioni / peso del prodotto	W101.2 x D53.8 x H78.2 / 200g
Prodotti supportati	TNS-7000M
LED	
Wavelength	455nm
Quantità	16EA
Angolo	FWHM : 25° 10-% : 46°

Design and specifications are subject to change without notice. The latest product information / specification can be found at HanwhaVision.com
Hanwha Vision is formerly known as Hanwha Techwin.

© Hanwha Vision CO., LTD. All rights reserved.

SPI-BBM0

Accessorio modulo LED blu per obiettivo da 12 mm


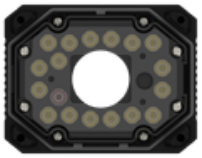


CAD

Unit: mm [inch]

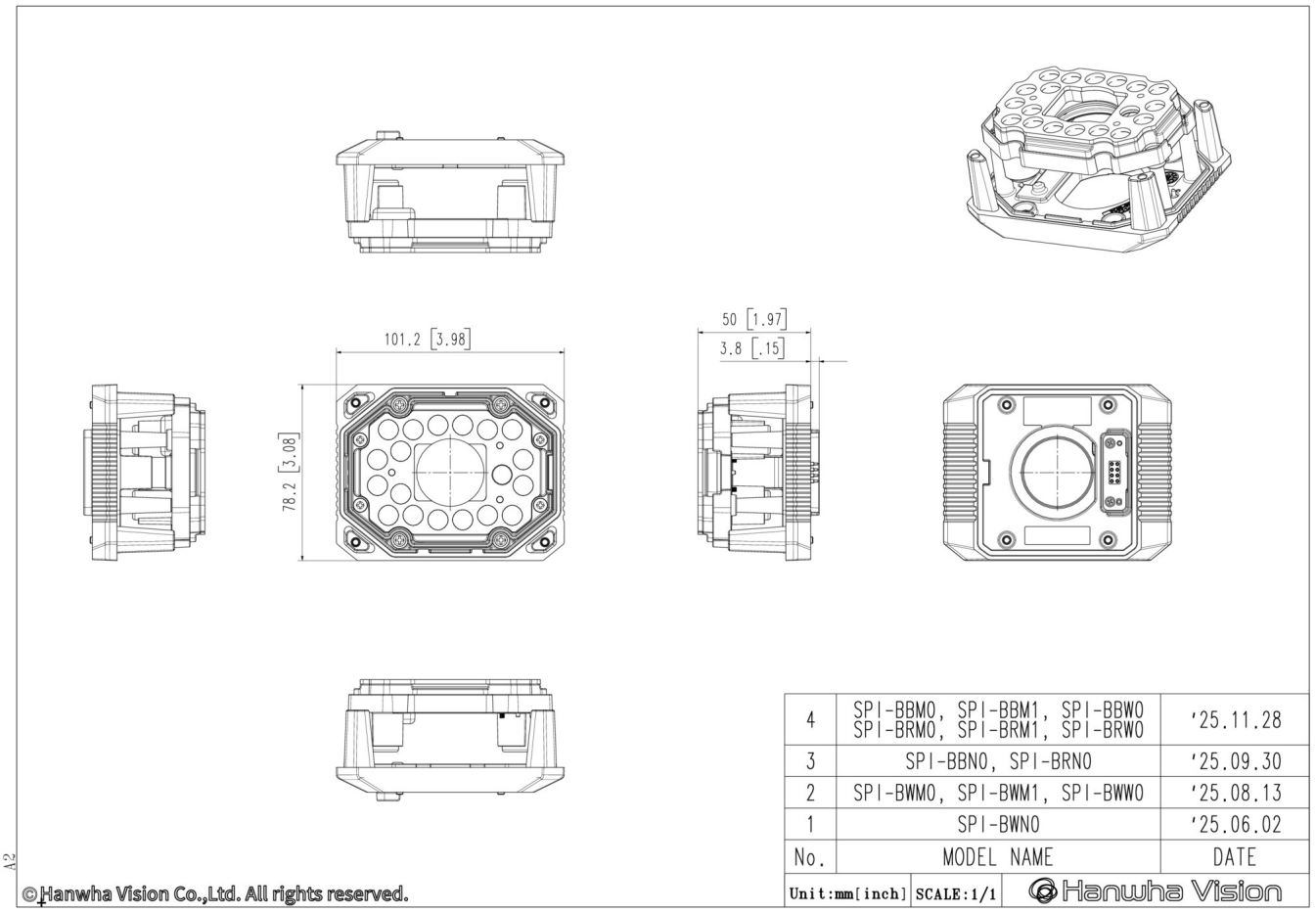

No.	MODEL NAME	DATE
4	SPI-BBM0, SPI-BBM1, SPI-BBW0 SPI-BRM0, SPI-BRM1, SPI-BRW0	'25.11.28
3	SPI-BBN0, SPI-BRN0	'25.09.30
2	SPI-BWM0, SPI-BWM1, SPI-BWW0	'25.08.13
1	SPI-BWN0	'25.06.02

Unit:mm[inch] SCALE:1/1 Hanwha Vision

A2

©Hanwha Vision Co.,Ltd. All rights reserved.

Design and specifications are subject to change without notice. The latest product information / specification can be found at HanwhaVision.com
Hanwha Vision is formerly known as Hanwha Techwin.

© Hanwha Vision CO., LTD. All rights reserved.