

SPI-BBM1

Accesorio de módulo LED azul para lente de 8 mm

Key Features

- Módulo LED azul para cámara BCR de 3MP, disponible con lente de 8mm
- Consumo de energía: 6.9 W
- Cantidad de LED: 16EA
- IP66/IP67 (la cámara y la cubierta frontal deben estar ensambladas)
- Temperatura / humedad de funcionamiento: -40°C~+55°C / 0~95% RH
- Productos compatibles: TNS-7000M
- Lente compatible: SLM-5M12

Design and specifications are subject to change without notice. The latest product information / specification can be found at HanwhaVision.com
Hanwha Vision is formerly known as Hanwha Techwin.

© Hanwha Vision CO., LTD. All rights reserved.

SPI-BBM1

Accesorio de módulo LED azul para lente de 8 mm


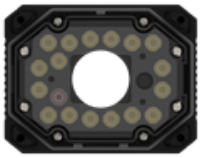


Specifications

Medioambiental

Temperatura / humedad operativas	-40°C~+55°C / 0~95% RH
Temperatura / humedad de almacenamiento	-40°C ~ +60°C / Less than 95% RH
Certificación	FCC, UL, CE, KC, IEC 62471 IP66/IP67(camera and front cover must be assembled)

Eléctrico

Voltaje de entrada	24 VDC ± 10%
Consumo de corriente	6.9 W

Mecánico

Dimensiones y peso del producto	W101.2 x D53.8 x H78.2 / 200g
Productos admitidos	TNS-7000M

LED

Wavelength	455nm
Cantidad	16EA
Ángulo	FWHM : 43° 10-% : 70°

Design and specifications are subject to change without notice. The latest product information / specification can be found at HanwhaVision.com
Hanwha Vision is formerly known as Hanwha Techwin.

© Hanwha Vision CO., LTD. All rights reserved.

SPI-BBM1

Accesorio de módulo LED azul para lente de 8 mm


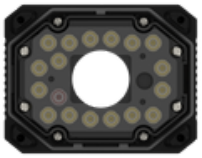


CAD

Unit: mm [inch]

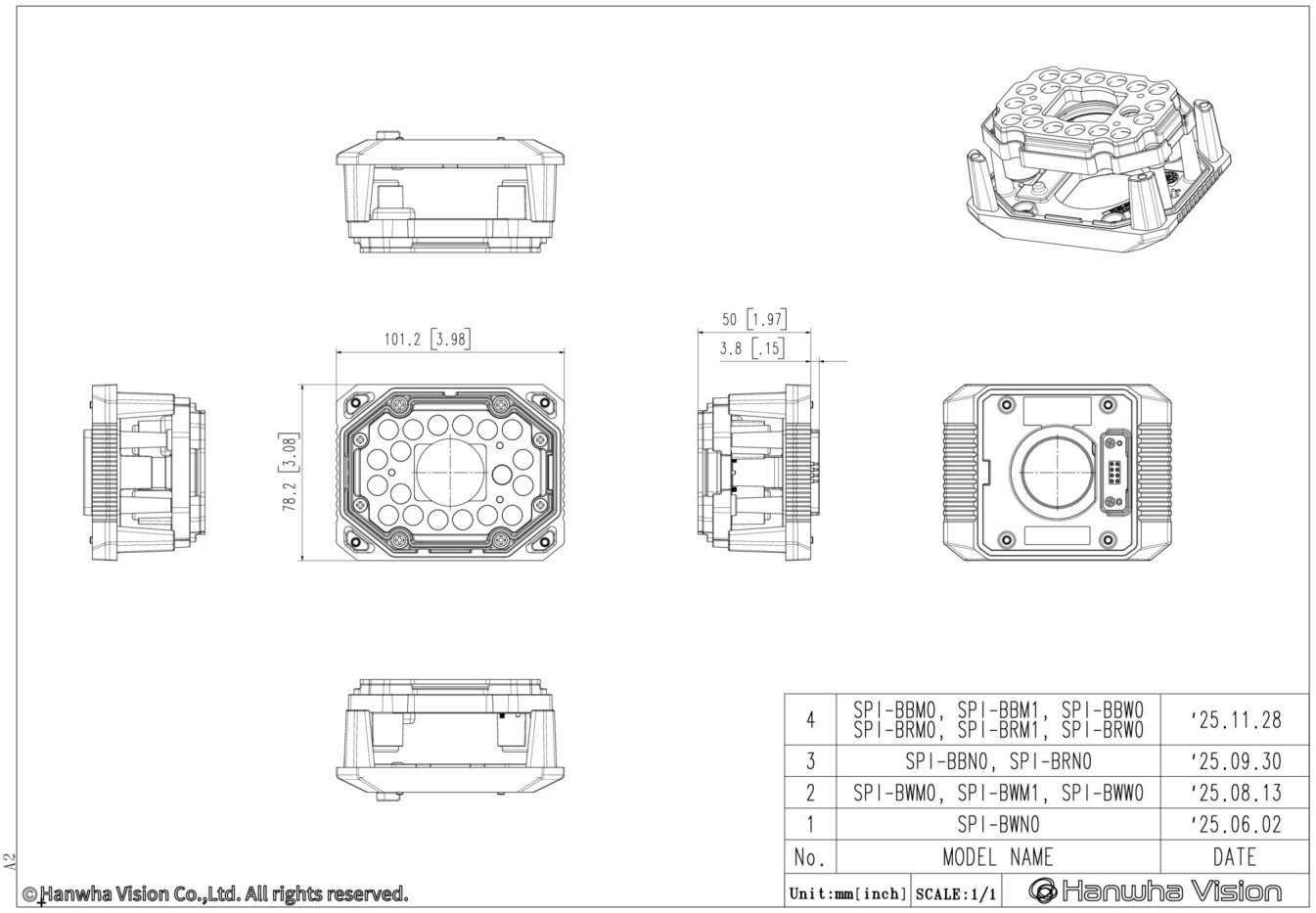

Design and specifications are subject to change without notice. The latest product information / specification can be found at HanwhaVision.com
Hanwha Vision is formerly known as Hanwha Techwin.

© Hanwha Vision CO., LTD. All rights reserved.