

SPI-BBN0

Blaues LED-Modul-Zubehör für 16-mm/25-mm-Objektive

Key Features

- Blaues LED-Modul für 3MP BCR-Kamera, erhältlich mit 16/25mm Objektiv
- Stromverbrauch: 6,9 W
- Anzahl der LEDs: 16 Stück
- IP66/IP67 (Kamera und Frontabdeckung müssen montiert sein)
- Betriebstemperatur / Luftfeuchtigkeit: -40°C~+55°C / 0~95% RH
- Unterstützte Produkte: TNS-7000M
- Kompatible Objektive: SLM-5M16, SLM-5M25

Design and specifications are subject to change without notice. The latest product information / specification can be found at HanwhaVision.com
Hanwha Vision is formerly known as Hanwha Techwin.

© Hanwha Vision CO., LTD. All rights reserved.

SPI-BBN0

Blaues LED-Modul-Zubehör für 16-mm/25-mm-Objektive


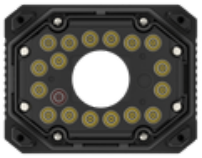


Specifications

Umwelt	
Betriebstemperatur / Luftfeuchtigkeit	-40°C~+55°C / 0~95% RH
Lagertemperatur / Luftfeuchtigkeit	-40°C ~ +60°C / Less than 95% RH
Zertifizierung	FCC, UL, CE, KC, IEC 62471 IP66/IP67(camera and front cover must be assembled)
Elektrisch	
Eingangsspannung	24 VDC ± 10%
Stromverbrauch	18 W
Mechanisch	
Produktabmessungen / Gewicht	W101.2 x D53.8 x H78.2 / 200g
Unterstützte Produkte	TNS-7000M
LED	
Wavelength	455nm
Menge	16EA
Winkel	FWHM : 17° 10-% : 32°

Design and specifications are subject to change without notice. The latest product information / specification can be found at HanwhaVision.com
Hanwha Vision is formerly known as Hanwha Techwin.

© Hanwha Vision CO., LTD. All rights reserved.

SPI-BBN0

Blaues LED-Modul-Zubehör für 16-mm/25-mm-Objektive


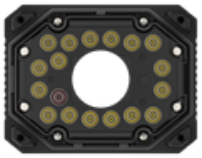


CAD

Unit: mm [inch]

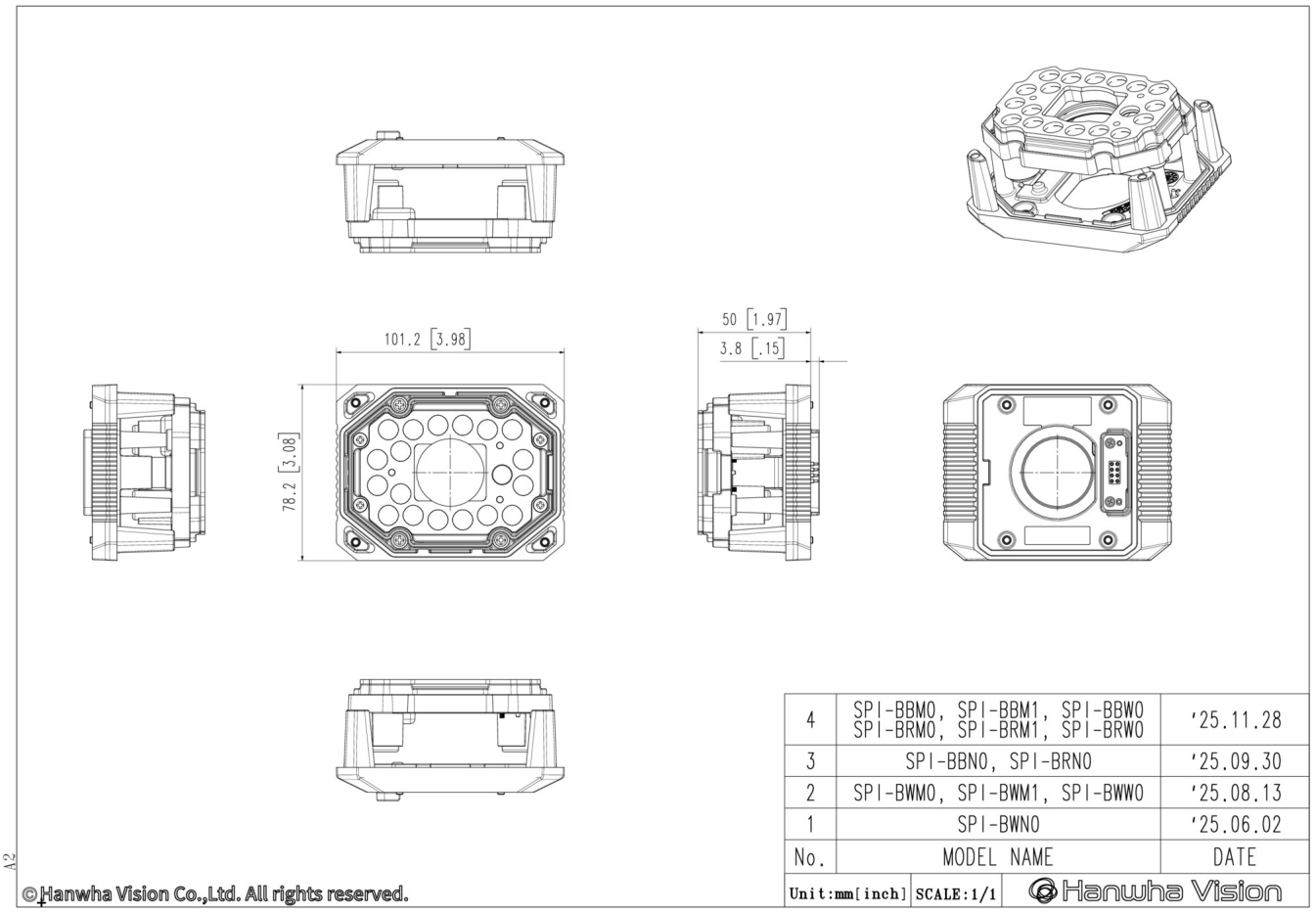

No.	MODEL NAME	DATE
4	SPI-BBM0, SPI-BBM1, SPI-BBW0 SPI-BRM0, SPI-BRM1, SPI-BRW0	'25.11.28
3	SPI-BBN0, SPI-BRN0	'25.09.30
2	SPI-BWM0, SPI-BWM1, SPI-BWW0	'25.08.13
1	SPI-BWN0	'25.06.02

Unit:mm[inch] SCALE:1/1 Hanwha Vision

Design and specifications are subject to change without notice. The latest product information / specification can be found at HanwhaVision.com
Hanwha Vision is formerly known as Hanwha Techwin.

© Hanwha Vision CO., LTD. All rights reserved.