

SPI-BBN0

Module LED de caméra BCR

Key Features

- Module LED bleu pour caméra BCR 3MP
- Consommation électrique : 6,9 W
- Quantité de LED : 16EA
- IP66/IP67 (la caméra et le couvercle avant doivent être assemblés)
- Température / humidité de fonctionnement : -40°C~+55°C / 0~95% HR
- Caméra compatible : TNS-7000M
- Objectifs compatibles : SLM-5M16, SLM-5M25

Design and specifications are subject to change without notice. The latest product information / specification can be found at HanwhaVision.com
Hanwha Vision is formerly known as Hanwha Techwin.

© Hanwha Vision CO., LTD. All rights reserved.

SPI-BBN0

Module LED de caméra BCR


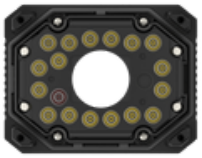


Specifications

Environnement	
Température / Humidité de fonctionnement	-40°C~+55°C / 0~95% RH
Température / Humidité de stockage	-40°C ~ +60°C / Less than 95% RH
Certification	FCC, UL, CE, KC, IEC 62471 IP66/IP67(camera and front cover must be assembled)
Électrique	
Tension d'entrée	24 VDC ± 10%
Consommation électrique	18 W
Mécanique	
Dimensions / Poids du produit	W101.2 x D53.8 x H78.2 / 200g
Produit pris en charge	TNS-7000M
LED	
Wavelength	455nm
Quantité	16EA
Angle	FWHM : 17° 10-% : 32°

Design and specifications are subject to change without notice. The latest product information / specification can be found at HanwhaVision.com
Hanwha Vision is formerly known as Hanwha Techwin.

© Hanwha Vision CO., LTD. All rights reserved.

SPI-BBN0

Module LED de caméra BCR


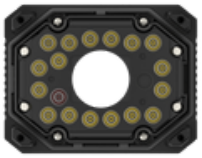


CAD

Unit: mm [inch]

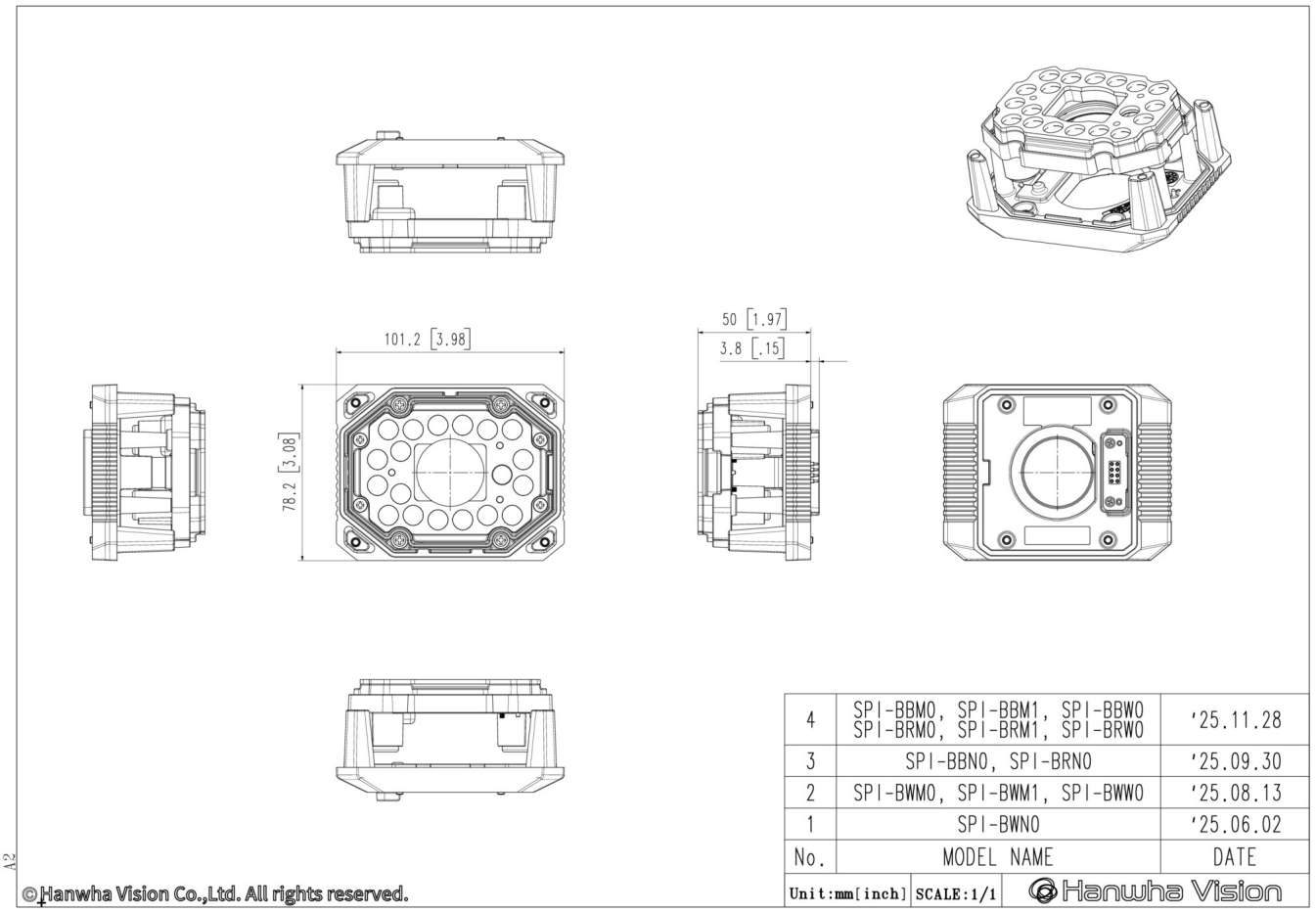

Design and specifications are subject to change without notice. The latest product information / specification can be found at HanwhaVision.com
Hanwha Vision is formerly known as Hanwha Techwin.

© Hanwha Vision CO., LTD. All rights reserved.