

SPI-BBN0

Blue LED Module Accessory for 16mm/25mm lens

Key Features

- Blue LED Module for 3MP BCR Camera, available with 16/25mm lens
- Power Consumption: 6.9 W
- LED Quantity: 16EA
- IP66/IP67(camera and front cover must be assembled)
- Operating Temperature / Humidity: -40°C~+55°C / 0~95% RH
- Supported products: TNS-7000M
- Compatible Lenses: SLM-5M16, SLM-5M25

Design and specifications are subject to change without notice. The latest product information / specification can be found at HanwhaVision.com
Hanwha Vision is formerly known as Hanwha Techwin.

© Hanwha Vision CO., LTD. All rights reserved.

SPI-BBN0

Blue LED Module Accessory for 16mm/25mm lens


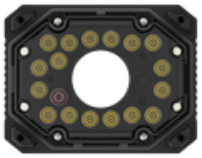


Specifications

Environmental	
Operating Temperature / Humidity	-40°C~+55°C / 0~95% RH
Storage Temperature / Humidity	-40°C ~ +60°C / Less than 95% RH
Certification	FCC, UL, CE, KC, IEC 62471 IP66/IP67(camera and front cover must be assembled)
Electrical	
Input Voltage	24 VDC ± 10%
Power Consumption	18 W
Mechanical	
Product dimensions / weight	W101.2 x D53.8 x H78.2 / 200g
Supported products	TNS-7000M
LED	
Wavelength	455nm
Quantity	16EA
Angle	FWHM : 17° 10-% : 32°

Design and specifications are subject to change without notice. The latest product information / specification can be found at HanwhaVision.com
Hanwha Vision is formerly known as Hanwha Techwin.

© Hanwha Vision CO., LTD. All rights reserved.

SPI-BBN0

Blue LED Module Accessory for
16mm/25mm lens


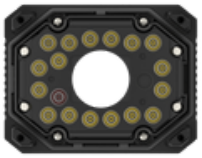


CAD

Unit: mm [inch]

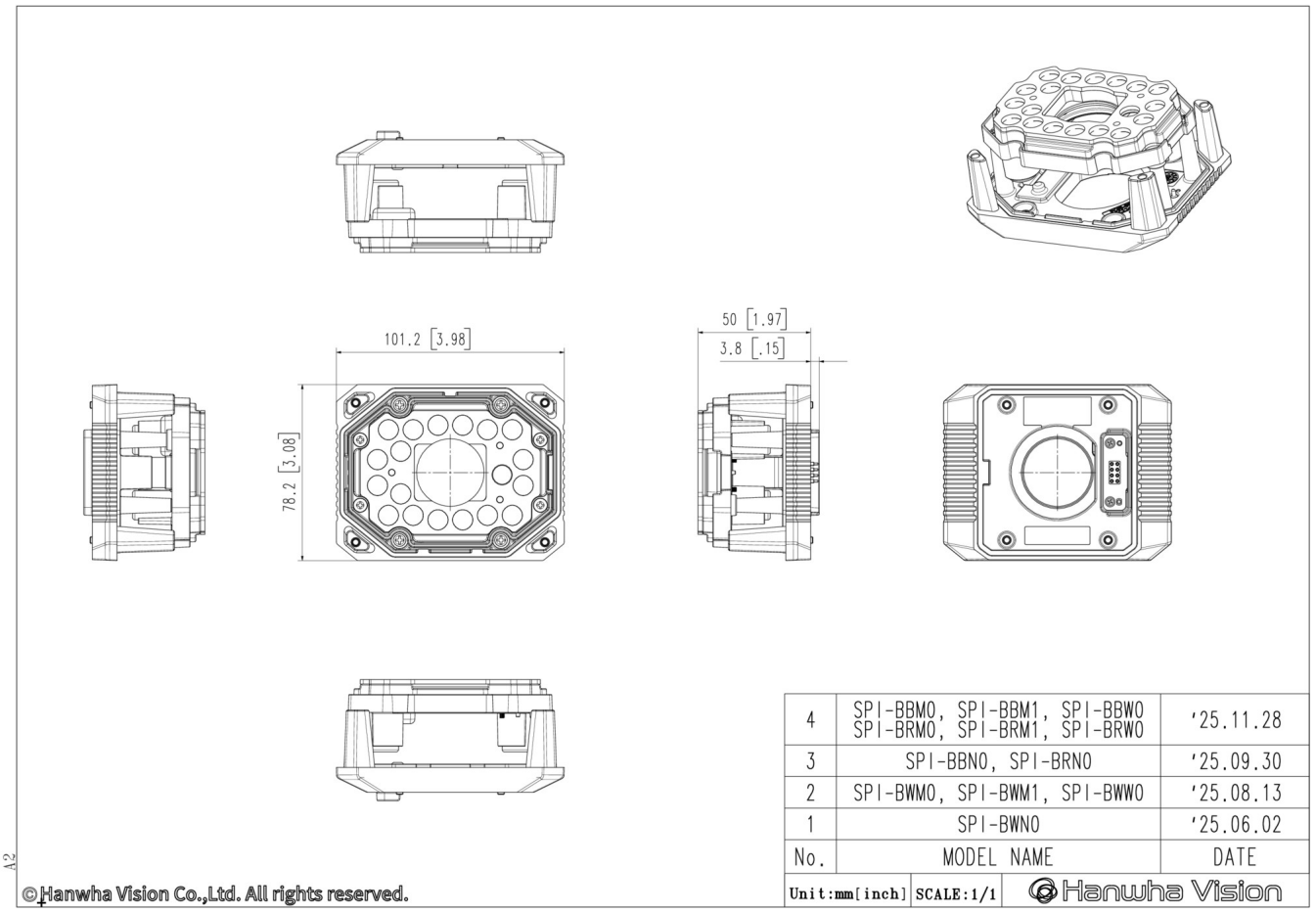

No.	MODEL NAME	DATE
4	SPI-BBM0, SPI-BBM1, SPI-BBW0 SPI-BRM0, SPI-BRM1, SPI-BRW0	'25.11.28
3	SPI-BBN0, SPI-BRN0	'25.09.30
2	SPI-BWM0, SPI-BWM1, SPI-BWW0	'25.08.13
1	SPI-BWN0	'25.06.02

Unit:mm[inch] SCALE:1/1 Hanwha Vision

A2

©Hanwha Vision Co.,Ltd. All rights reserved.

Design and specifications are subject to change without notice. The latest product information / specification can be found at HanwhaVision.com
Hanwha Vision is formerly known as Hanwha Techwin.

© Hanwha Vision CO., LTD. All rights reserved.