

SPI-BBW0

Accesorio de módulo LED azul para lente de 6 mm

Key Features

- Módulo LED azul para cámara BCR de 3MP, disponible con lente de 6mm
- Consumo de energía: 6.9 W
- Cantidad de LED: 16EA
- IP66/IP67 (la cámara y la cubierta frontal deben estar ensambladas)
- Temperatura / Humedad de funcionamiento: -40°C~+55°C / 0~95% RH
- Productos compatibles: TNS-7000M
- Lente compatible: SLM-5M06

Design and specifications are subject to change without notice. The latest product information / specification can be found at HanwhaVision.com
Hanwha Vision is formerly known as Hanwha Techwin.

© Hanwha Vision CO., LTD. All rights reserved.

SPI-BBW0

Accesorio de módulo LED azul para lente de 6 mm


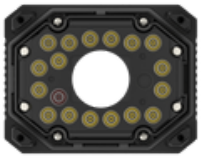


Specifications

Medioambiental	
Temperatura / humedad operativas	-40°C~+55°C / 0~95% RH
Temperatura / humedad de almacenamiento	-40°C ~ +60°C / Less than 95% RH
Certificación	FCC, UL, CE, KC, IEC 62471 IP66/IP67(camera and front cover must be assembled)
Eléctrico	
Voltaje de entrada	24 VDC ± 10%
Consumo de corriente	6.9 W
Mecánico	
Dimensiones y peso del producto	W101.2 x D53.8 x H78.2 / 200g
Productos admitidos	TNS-7000M
LED	
Wavelength	455nm
Cantidad	16EA
Ángulo	FWHM : 60° 10-% : 88°

Design and specifications are subject to change without notice. The latest product information / specification can be found at HanwhaVision.com
Hanwha Vision is formerly known as Hanwha Techwin.

© Hanwha Vision CO., LTD. All rights reserved.

SPI-BBW0

Accesorio de módulo LED azul para lente de 6 mm


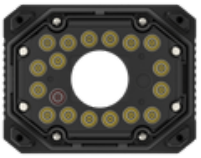


CAD

Unit: mm [inch]

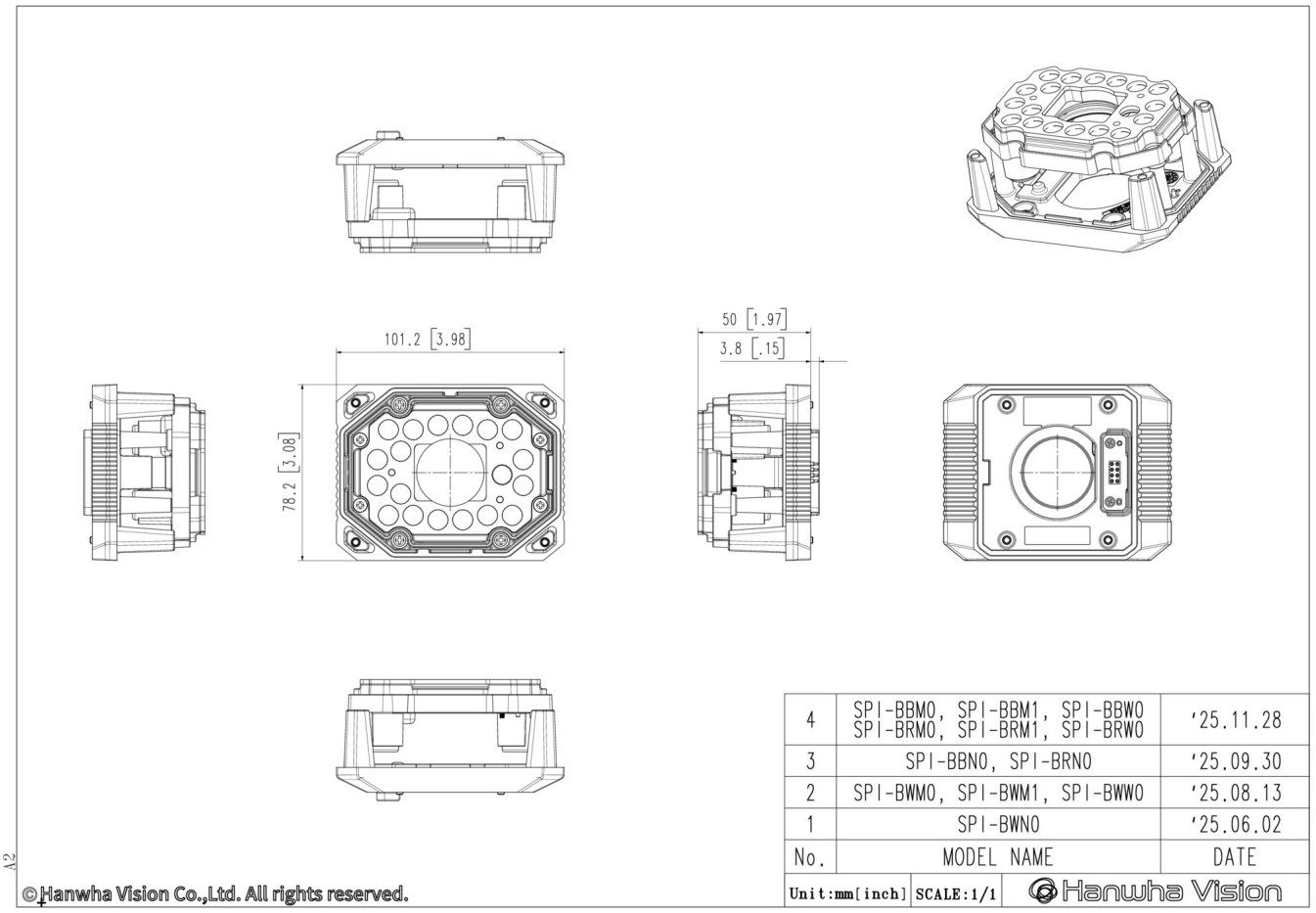

No.	MODEL NAME	DATE
4	SPI-BBM0, SPI-BBM1, SPI-BBW0 SPI-BRM0, SPI-BRM1, SPI-BRW0	'25.11.28
3	SPI-BBN0, SPI-BRN0	'25.09.30
2	SPI-BWM0, SPI-BWM1, SPI-BWW0	'25.08.13
1	SPI-BWN0	'25.06.02

Unit:mm[inch] SCALE:1/1 Hanwha Vision

A2

©Hanwha Vision Co.,Ltd. All rights reserved.

Design and specifications are subject to change without notice. The latest product information / specification can be found at HanwhaVision.com
Hanwha Vision is formerly known as Hanwha Techwin.

© Hanwha Vision CO., LTD. All rights reserved.