

SPI-BRM0

Rotes LED-Modul-Zubehör für 12mm-Objektiv

Key Features

- Rotes LED-Modul für 3MP BCR-Kamera, verfügbar mit 12mm Objektiv
- Stromverbrauch: 6,9 W
- Anzahl der LEDs: 16 Stück
- IP66/IP67 (Kamera und Frontabdeckung müssen montiert sein)
- Betriebstemperatur / Luftfeuchtigkeit: -40°C~+55°C / 0~95% RH
- Kompatible Kamera: TNS-7000M
- Kompatibles Objektiv: SLM-5M12

Design and specifications are subject to change without notice. The latest product information / specification can be found at HanwhaVision.com
Hanwha Vision is formerly known as Hanwha Techwin.

© Hanwha Vision CO., LTD. All rights reserved.

SPI-BRM0

Rotes LED-Modul-Zubehör für 12mm-Objektiv


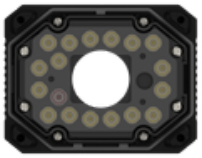


Specifications

Umwelt	
Betriebstemperatur / Luftfeuchtigkeit	-40°C~+55°C / 0~95% RH
Lagertemperatur / Luftfeuchtigkeit	-40°C ~ +60°C / Less than 95% RH
Zertifizierung	FCC, UL, CE, KC, IEC 62471 IP66/IP67(camera and front cover must be assembled)
Elektrisch	
Eingangsspannung	24 VDC ± 10%
Stromverbrauch	6.9 W
Mechanisch	
Produktabmessungen / Gewicht	W101.2 x D53.8 x H78.2 / 200g
Unterstützte Produkte	TNS-7000M
LED	
Wavelength	617nm
Menge	16EA
Winkel	FWHM : 25° 10-% : 46°

Design and specifications are subject to change without notice. The latest product information / specification can be found at HanwhaVision.com
Hanwha Vision is formerly known as Hanwha Techwin.

© Hanwha Vision CO., LTD. All rights reserved.

SPI-BRM0

Rotes LED-Modul-Zubehör für 12mm-Objektiv


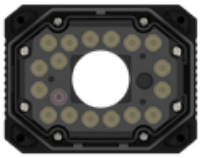


CAD

Unit: mm [inch]

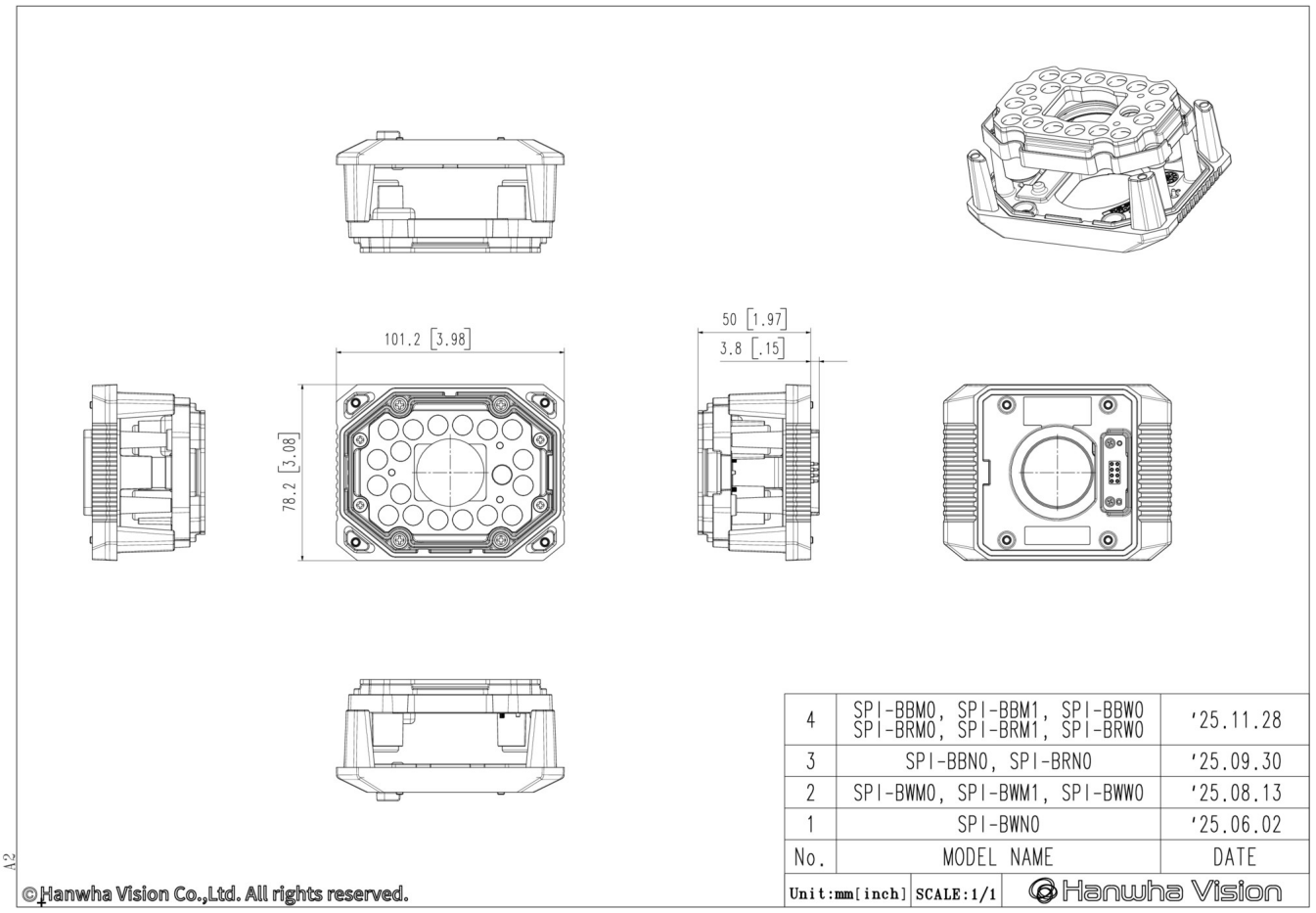

Design and specifications are subject to change without notice. The latest product information / specification can be found at HanwhaVision.com
Hanwha Vision is formerly known as Hanwha Techwin.

© Hanwha Vision CO., LTD. All rights reserved.