

# SPI-BRN0

Rotes LED-Modul-Zubehör für 16-mm/25-mm-Objektiv

## Key Features

- Rotes LED-Modul für 3MP BCR-Kamera, verfügbar mit 16/25mm Objektiv
- Leistungsaufnahme: 6,9 W
- Anzahl der LEDs: 16 Stück
- IP66/IP67 (Kamera und Frontabdeckung müssen montiert sein)
- Betriebstemperatur / Luftfeuchtigkeit: -40°C~+55°C / 0~95% RH
- Unterstützte Produkte: TNS-7000M
- Kompatible Objektive: SLM-5M16, SLM-5M25

Design and specifications are subject to change without notice. The latest product information / specification can be found at HanwhaVision.com
Hanwha Vision is formerly known as Hanwha Techwin.

© Hanwha Vision CO., LTD. All rights reserved.

# SPI-BRN0

Rotes LED-Modul-Zubehör für 16-mm/25-mm-Objektiv


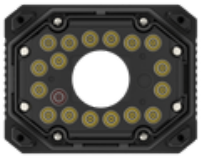


## Specifications

| | |
|---|---|
| **Umwelt** | |
| **Betriebstemperatur / Luftfeuchtigkeit** | -40°C~+55°C / 0~95% RH |
| **Lagertemperatur / Luftfeuchtigkeit** | -40°C ~ +60°C / Less than 95% RH |
| **Zertifizierung** | FCC, UL, CE, KC, IEC 62471<br>IP66/IP67(camera and front cover must be assembled) |
| **Elektrisch** | |
| **Eingangsspannung** | 24 VDC ± 10% |
| **Stromverbrauch** | 18 W |
| **Mechanisch** | |
| **Produktabmessungen / Gewicht** | W101.2 x D53.8 x H78.2 / 200g |
| **Unterstützte Produkte** | TNS-7000M |
| **LED** | |
| **Wavelength** | 617nm |
| **Menge** | 16EA |
| **Winkel** | FWHM : 17°<br>10-% : 32° |

Design and specifications are subject to change without notice. The latest product information / specification can be found at HanwhaVision.com
Hanwha Vision is formerly known as Hanwha Techwin.

© Hanwha Vision CO., LTD. All rights reserved.

# SPI-BRN0

Rotes LED-Modul-Zubehör für 16-mm/25-mm-Objektiv


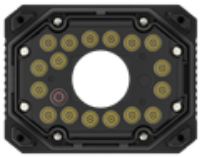


## CAD

**Unit:** mm [inch]

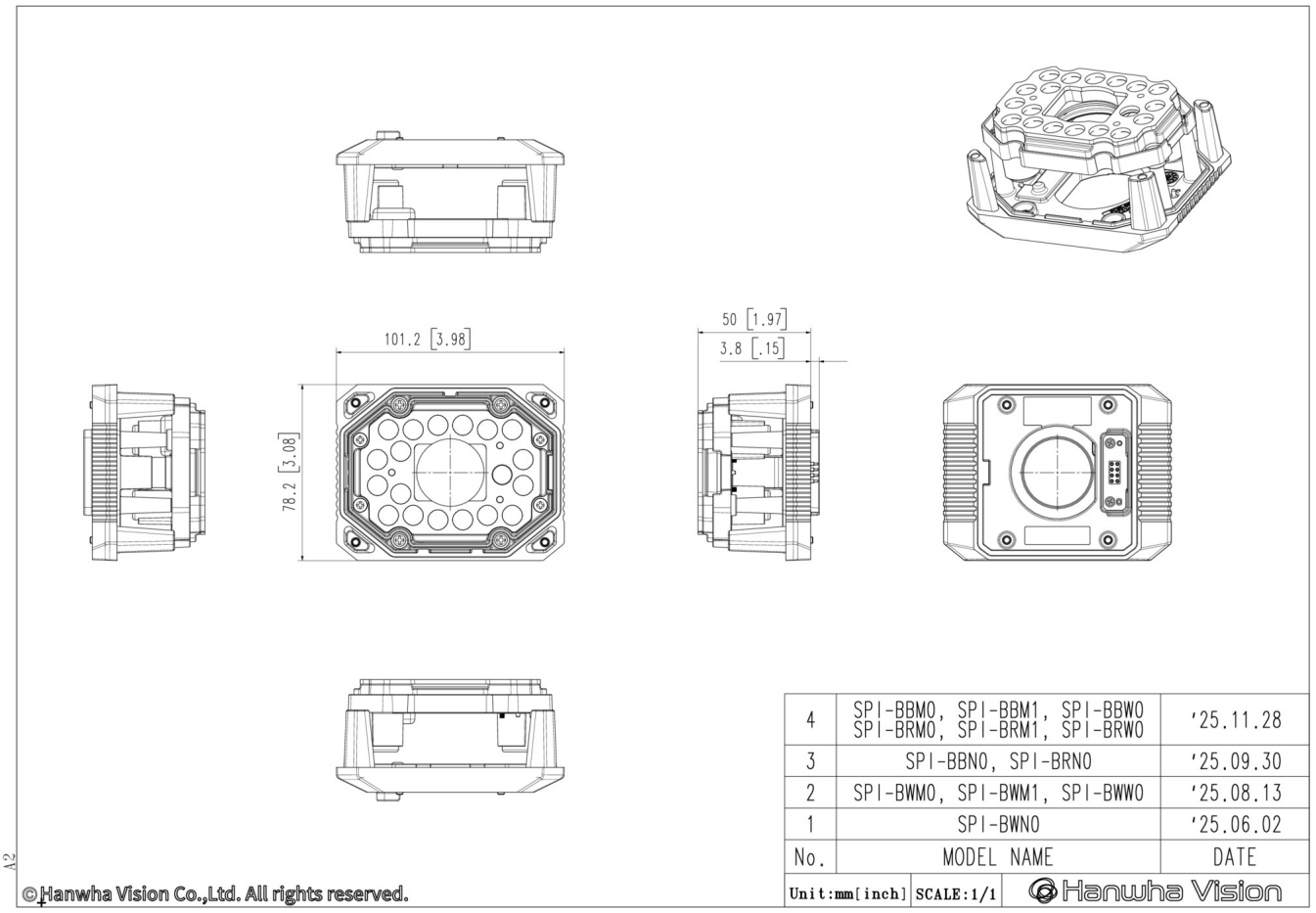


| No. | MODEL NAME | DATE |
|---|---|---|
| 4 | SPI-BBM0, SPI-BBM1, SPI-BBW0 SPI-BRM0, SPI-BRM1, SPI-BRW0 | '25.11.28 |
| 3 | SPI-BBN0, SPI-BRN0 | '25.09.30 |
| 2 | SPI-BWM0, SPI-BWM1, SPI-BWW0 | '25.08.13 |
| 1 | SPI-BWN0 | '25.06.02 |

Unit:mm[inch] SCALE:1/1 Hanwha Vision

Design and specifications are subject to change without notice. The latest product information / specification can be found at HanwhaVision.com
Hanwha Vision is formerly known as Hanwha Techwin.

© Hanwha Vision CO., LTD. All rights reserved.