

SPI-BRN0

Accessorio modulo LED rosso per obiettivo da 16mm/25mm

Key Features

- Modulo LED rosso per fotocamera BCR 3MP, disponibile con obiettivo 16/25mm
- Consumo energetico: 6.9 W
- Quantità LED: 16EA
- IP66/IP67 (la fotocamera e la copertura frontale devono essere assemblate)
- Temperatura / umidità di funzionamento: -40°C~+55°C / 0~95% RH
- Prodotti supportati: TNS-7000M
- Obiettivi compatibili: SLM-5M16, SLM-5M25

Design and specifications are subject to change without notice. The latest product information / specification can be found at HanwhaVision.com
Hanwha Vision is formerly known as Hanwha Techwin.

© Hanwha Vision CO., LTD. All rights reserved.

SPI-BRN0

Accessorio modulo LED rosso per obiettivo da 16mm/25mm


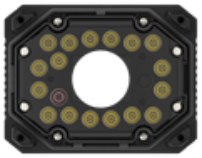


Specifications

Certificazioni	
Temperatura / Umidità di esercizio	-40°C~+55°C / 0~95% RH
Temperatura / Umidità di stoccaggio	-40°C ~ +60°C / Less than 95% RH
Ambientali	FCC, UL, CE, KC, IEC 62471 IP66/IP67(camera and front cover must be assembled)
Elettrico	
Tensione di ingresso	24 VDC ± 10%
Consumo energetico	18 W
Meccanico	
Dimensioni / peso del prodotto	W101.2 x D53.8 x H78.2 / 200g
Prodotti supportati	TNS-7000M
LED	
Wavelength	617nm
Quantità	16EA
Angolo	FWHM : 17° 10-% : 32°

Design and specifications are subject to change without notice. The latest product information / specification can be found at HanwhaVision.com
Hanwha Vision is formerly known as Hanwha Techwin.

© Hanwha Vision CO., LTD. All rights reserved.

SPI-BRN0

Accessorio modulo LED rosso per obiettivo da 16mm/25mm


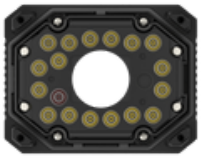


CAD

Unit: mm [inch]

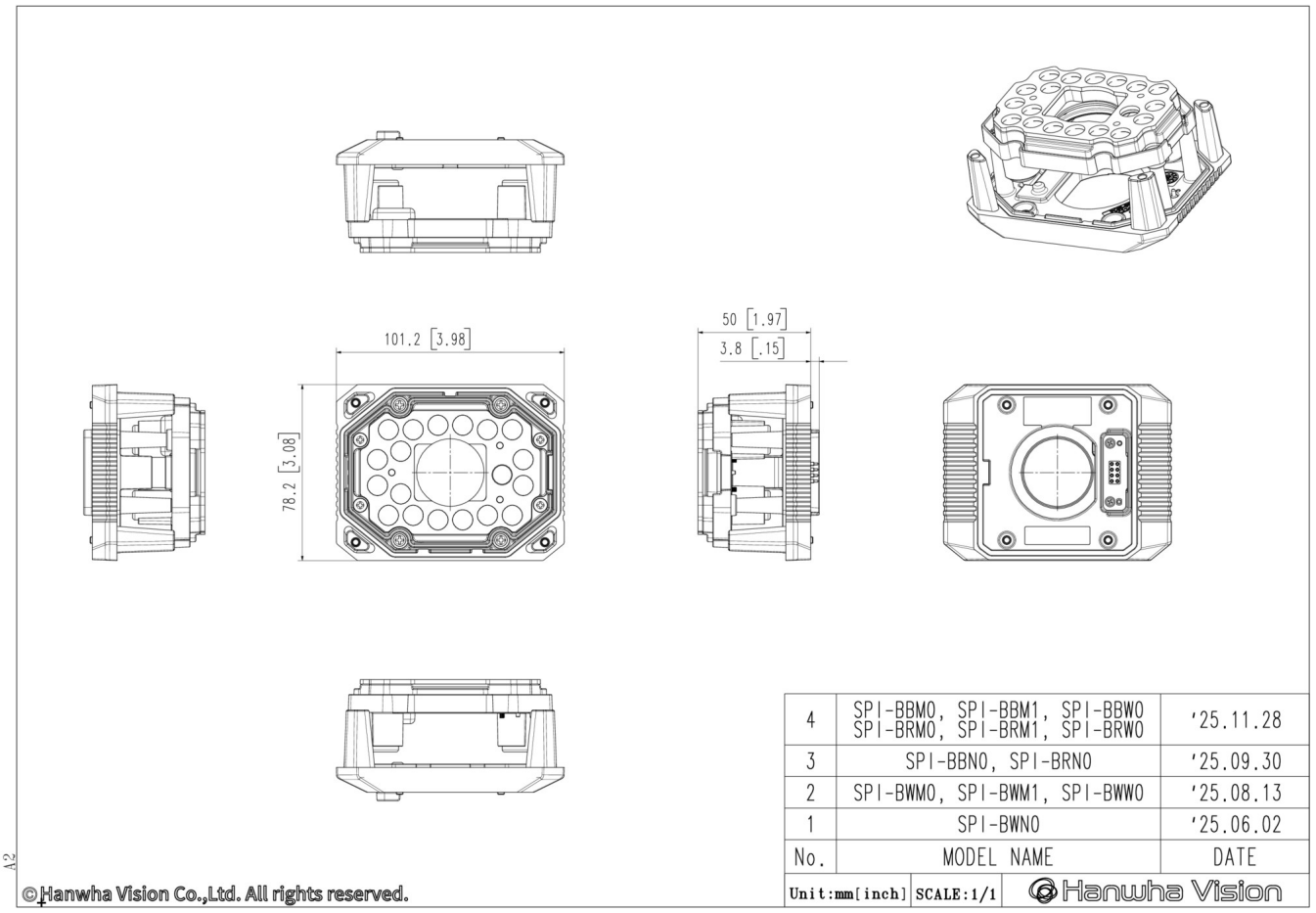

No.	MODEL NAME	DATE
4	SPI-BBM0, SPI-BBM1, SPI-BBW0 SPI-BRM0, SPI-BRM1, SPI-BRW0	'25.11.28
3	SPI-BBN0, SPI-BRN0	'25.09.30
2	SPI-BWM0, SPI-BWM1, SPI-BWW0	'25.08.13
1	SPI-BWN0	'25.06.02
Unit:mm[inch]	SCALE:1/1	Hanwha Vision

Design and specifications are subject to change without notice. The latest product information / specification can be found at HanwhaVision.com
Hanwha Vision is formerly known as Hanwha Techwin.

© Hanwha Vision CO., LTD. All rights reserved.