

SPI-BWM1

Module LED de caméra BCR

Key Features

- Module LED blanc pour caméra BCR 3MP
- Consommation électrique : 6,9 W
- Couleur LED : Blanc
- Quantité de LED : 16EA
- IP66/IP67 (la caméra et le couvercle avant doivent être assemblés)
- Température / Humidité de fonctionnement : -40°C~+55°C / 0~95% HR
- Caméra compatible : TNS-7000M
- Objectif compatible : SLM-5M08

Design and specifications are subject to change without notice. The latest product information / specification can be found at HanwhaVision.com
Hanwha Vision is formerly known as Hanwha Techwin.

© Hanwha Vision CO., LTD. All rights reserved.

SPI-BWM1

Module LED de caméra BCR



Specifications

Environnement	
Température / Humidité de fonctionnement	-40°C~+55°C (TBD) / 0~95% RH
Température / Humidité de stockage	-40°C ~ +60°C (TBD) / Less than 95% RH
Certification	FCC, UL, CE, KC, IEC 62471 IP66/IP67(camera and front cover must be assembled)
Électrique	
Tension d'entrée	24 VDC ± 10%
Consommation électrique	6.9W
Mécanique	
Dimensions / Poids du produit	W101.2mm x D53.8mm x H78.2mm / 200g
Produit pris en charge	TNS-7000M
LED	
Température de couleur	6,500 K ± 10%
Quantité	16EA
Angle	FWHM : 43° 10-% : 70°

Design and specifications are subject to change without notice. The latest product information / specification can be found at HanwhaVision.com
Hanwha Vision is formerly known as Hanwha Techwin.

© Hanwha Vision CO., LTD. All rights reserved.

SPI-BWM1

Module LED de caméra BCR



CAD

Unit: mm [inch]

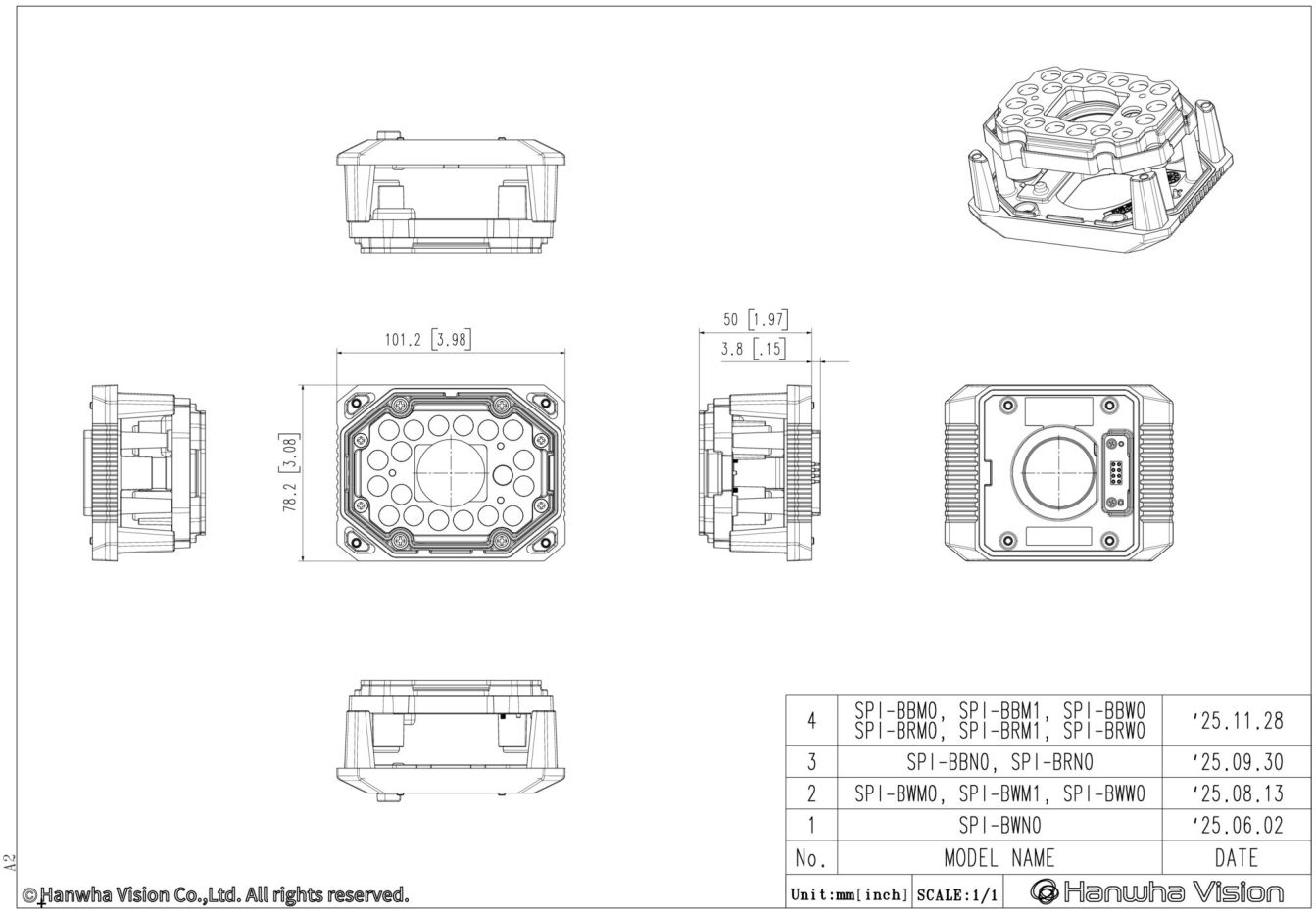

No.	MODEL NAME	DATE
4	SPI-BBM0, SPI-BBM1, SPI-BBW0 SPI-BRM0, SPI-BRM1, SPI-BRW0	'25.11.28
3	SPI-BBN0, SPI-BRN0	'25.09.30
2	SPI-BWM0, SPI-BWM1, SPI-BWW0	'25.08.13
1	SPI-BWN0	'25.06.02
Unit:mm[inch]	SCALE:1/1	Hanwha Vision

Design and specifications are subject to change without notice. The latest product information / specification can be found at HanwhaVision.com
Hanwha Vision is formerly known as Hanwha Techwin.

© Hanwha Vision CO., LTD. All rights reserved.