

SPI-BWM1

Accessorio modulo LED bianco per obiettivo 8mm

Key Features

- Modulo LED bianco per fotocamera BCR 3MP, disponibile con obiettivo da 8mm
- Consumo energetico: 6.9 W
- Colore LED: Bianco
- Quantità LED: 16EA
- IP66/IP67 (la fotocamera e la copertura frontale devono essere assemblate)
- Temperatura / umidità di funzionamento: -40°C~+55°C / 0~95% RH
- Prodotti supportati: TNS-7000M
- Obiettivo compatibile: SLM-5M08

Design and specifications are subject to change without notice. The latest product information / specification can be found at HanwhaVision.com
Hanwha Vision is formerly known as Hanwha Techwin.

© Hanwha Vision CO., LTD. All rights reserved.

SPI-BWM1

Accessorio modulo LED bianco per obiettivo 8mm


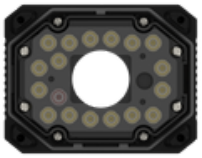


Specifications

Certificazioni	
Temperatura / Umidità di esercizio	-40°C~+55°C (TBD) / 0~95% RH
Temperatura / Umidità di stoccaggio	-40°C ~ +60°C (TBD) / Less than 95% RH
Ambientali	FCC, UL, CE, KC, IEC 62471 IP66/IP67(camera and front cover must be assembled)
Elettrico	
Tensione di ingresso	24 VDC ± 10%
Consumo energetico	6.9W
Meccanico	
Dimensioni / peso del prodotto	W101.2mm x D53.8mm x H78.2mm / 200g
Prodotti supportati	TNS-7000M
LED	
Temperatura colore	6,500 K ± 10%
Quantità	16EA
Angolo	FWHM : 43° 10-% : 70°

Design and specifications are subject to change without notice. The latest product information / specification can be found at HanwhaVision.com
Hanwha Vision is formerly known as Hanwha Techwin.

© Hanwha Vision CO., LTD. All rights reserved.

SPI-BWM1

Accessorio modulo LED bianco per obiettivo 8mm


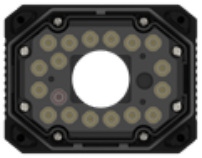


CAD

Unit: mm [inch]

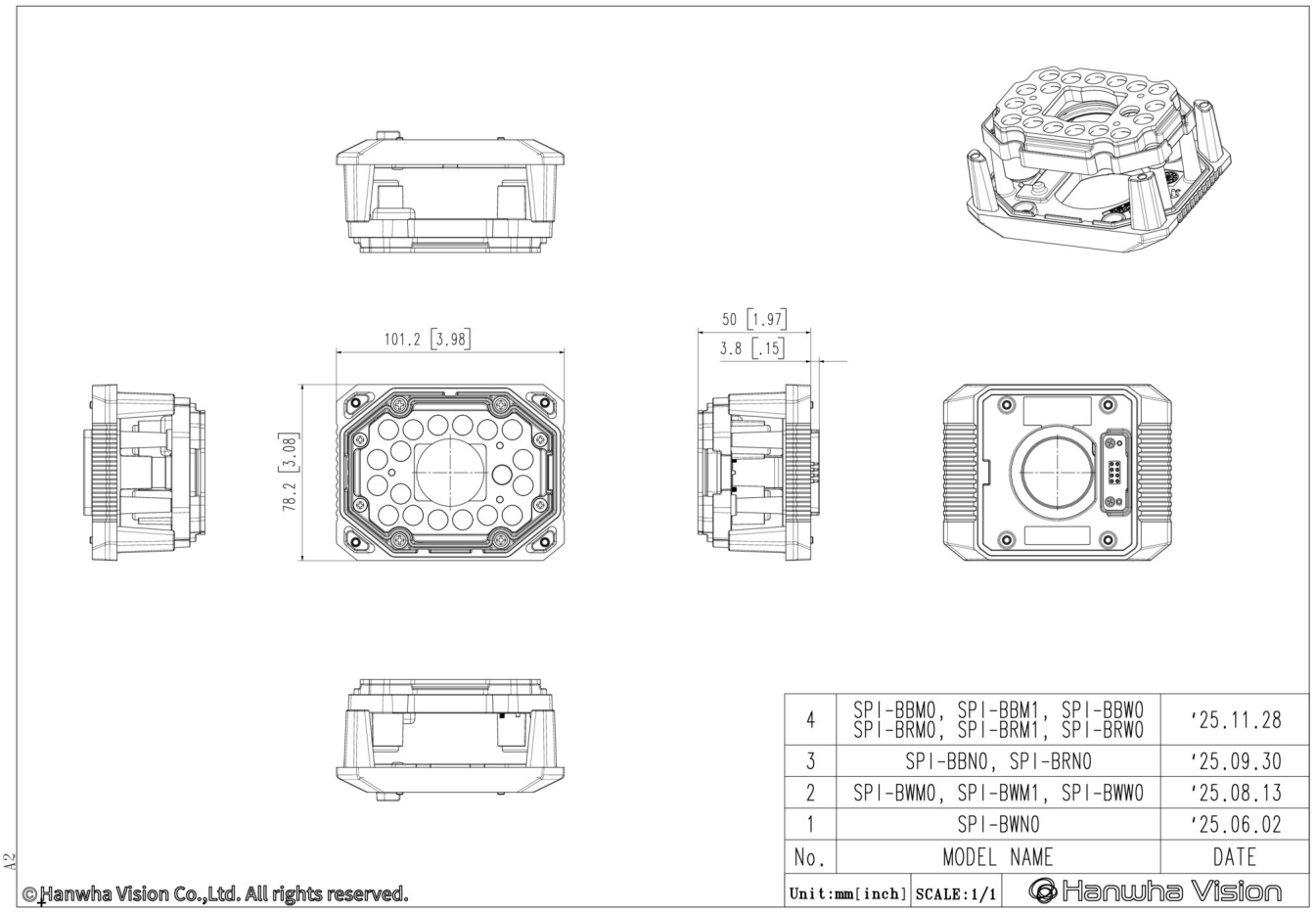

Design and specifications are subject to change without notice. The latest product information / specification can be found at HanwhaVision.com
Hanwha Vision is formerly known as Hanwha Techwin.

© Hanwha Vision CO., LTD. All rights reserved.