

SPI-BWM1

BCRカメラLEDモジュール

Key Features

- 3MP BCRカメラ用ホワイトLEDモジュール
- 消費電力: 6.9 W
- LEDカラー: ホワイト
- LED数量: 16EA
- IP66/IP67 (カメラとフロントカバーを組み立てる必要があります)
- 動作温度/湿度: -40°C~+55°C / 0~95% RH
- 対応カメラ: TNS-7000M
  対応レンズ: SLM-5M08

Design and specifications are subject to change without notice. The latest product information / specification can be found at HanwhaVision.com
Hanwha Vision is formerly known as Hanwha Techwin.

© Hanwha Vision CO., LTD. All rights reserved.

SPI-BWM1

BCRカメラLEDモジュール


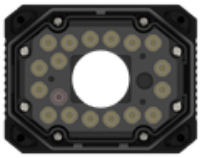


Specifications

Environmental	
Operating Temperature / Humidity	-40°C~+55°C (TBD) / 0~95% RH
Storage Temperature / Humidity	-40°C ~ +60°C (TBD) / Less than 95% RH
認証	FCC, UL, CE, KC, IEC 62471 IP66/IP67(camera and front cover must be assembled)
電源	
Input Voltage	24 VDC ± 10%
消費電力	6.9W
Mechanical	
Product dimensions / weight	W101.2mm x D53.8mm x H78.2mm / 200g
Supported products	TNS-7000M
LED	
Color Temperature	6,500 K ± 10%
Quantity	16EA
Angle	FWHM : 43° 10-% : 70°

Design and specifications are subject to change without notice. The latest product information / specification can be found at HanwhaVision.com
Hanwha Vision is formerly known as Hanwha Techwin.

© Hanwha Vision CO., LTD. All rights reserved.

SPI-BWM1

BCRカメラLEDモジュール


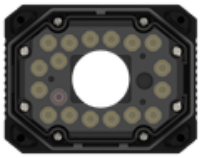


CAD

Unit: mm [inch]

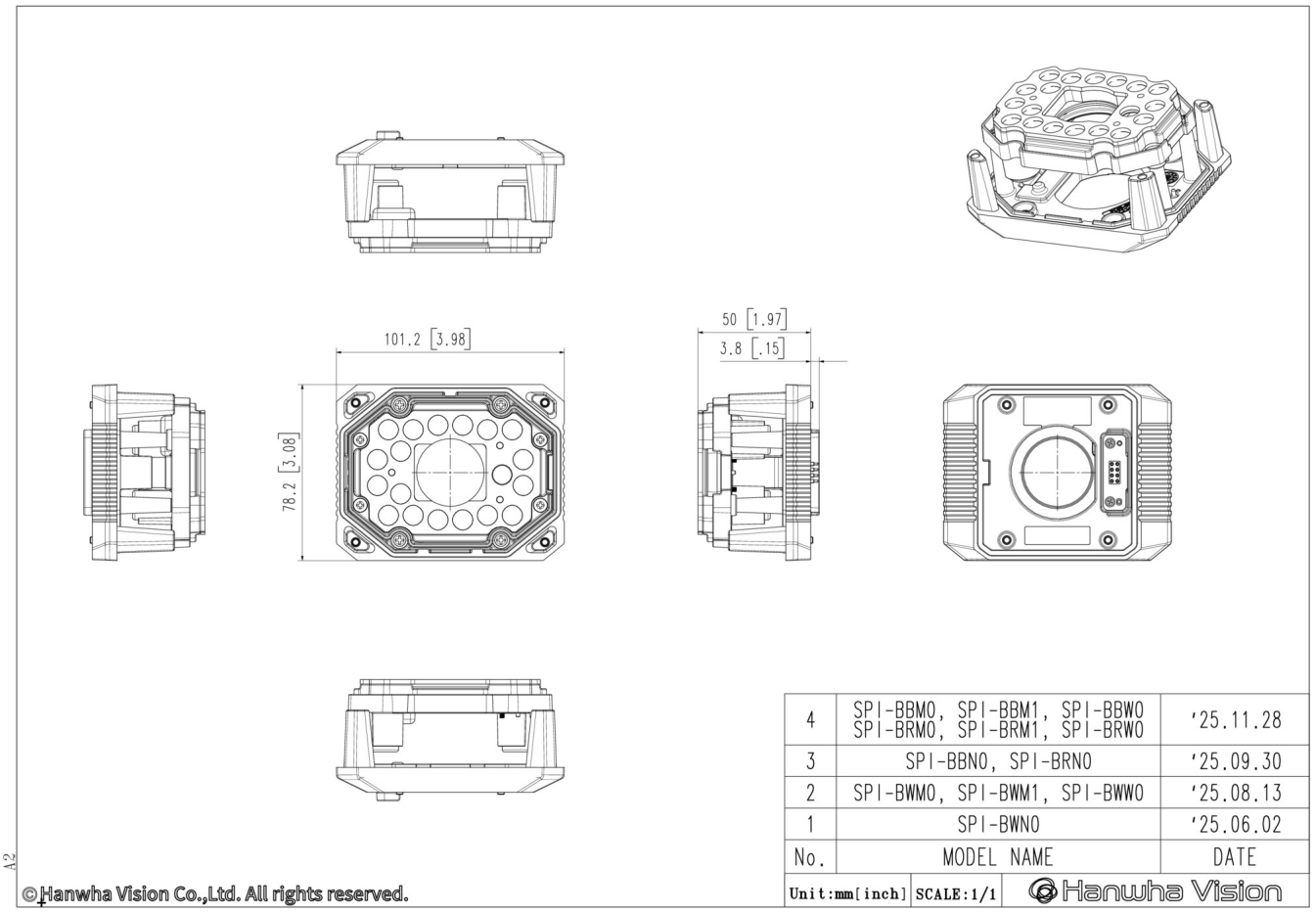

No.	MODEL NAME	DATE
4	SPI-BBM0, SPI-BBM1, SPI-BBW0 SPI-BRM0, SPI-BRM1, SPI-BRW0	'25.11.28
3	SPI-BBN0, SPI-BRN0	'25.09.30
2	SPI-BWM0, SPI-BWM1, SPI-BWW0	'25.08.13
1	SPI-BWN0	'25.06.02

Unit:mm[inch] SCALE:1/1 Hanwha Vision

Design and specifications are subject to change without notice. The latest product information / specification can be found at HanwhaVision.com
Hanwha Vision is formerly known as Hanwha Techwin.

© Hanwha Vision CO., LTD. All rights reserved.