

SPI-BWM1

BCR Camera LED module

Key Features

- White LED Module for 3MP BCR Camera
- Power Consumption: 6.9 W
- LED Color: White
- LED Quantity: 16EA
- IP66/IP67(camera and front cover must be assembled)
- Operating Temperature / Humidity: -40°C~+55°C / 0~95% RH
- Compatible Camera: TNS-7000M
  Compatible Lens: SLM-5M08

Design and specifications are subject to change without notice. The latest product information / specification can be found at HanwhaVision.com
Hanwha Vision is formerly known as Hanwha Techwin.

© Hanwha Vision CO., LTD. All rights reserved.

SPI-BWM1

BCR Camera LED module


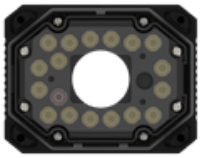


Specifications

Environmental	
Operating Temperature / Humidity	-40°C~+55°C (TBD) / 0~95% RH
Storage Temperature / Humidity	-40°C ~ +60°C (TBD) / Less than 95% RH
Certification	FCC, UL, CE, KC, IEC 62471 IP66/IP67(camera and front cover must be assembled)
Electrical	
Input Voltage	24 VDC ± 10%
Power Consumption	6.9W
Mechanical	
Product dimensions / weight	W101.2mm x D53.8mm x H78.2mm / 200g
Supported products	TNS-7000M
LED	
Color Temperature	6,500 K ± 10%
Quantity	16EA
Angle	FWHM : 43° 10-% : 70°

Design and specifications are subject to change without notice. The latest product information / specification can be found at HanwhaVision.com
Hanwha Vision is formerly known as Hanwha Techwin.

© Hanwha Vision CO., LTD. All rights reserved.

SPI-BWM1

BCR Camera LED module


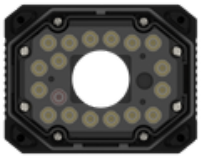


CAD

Unit: mm [inch]

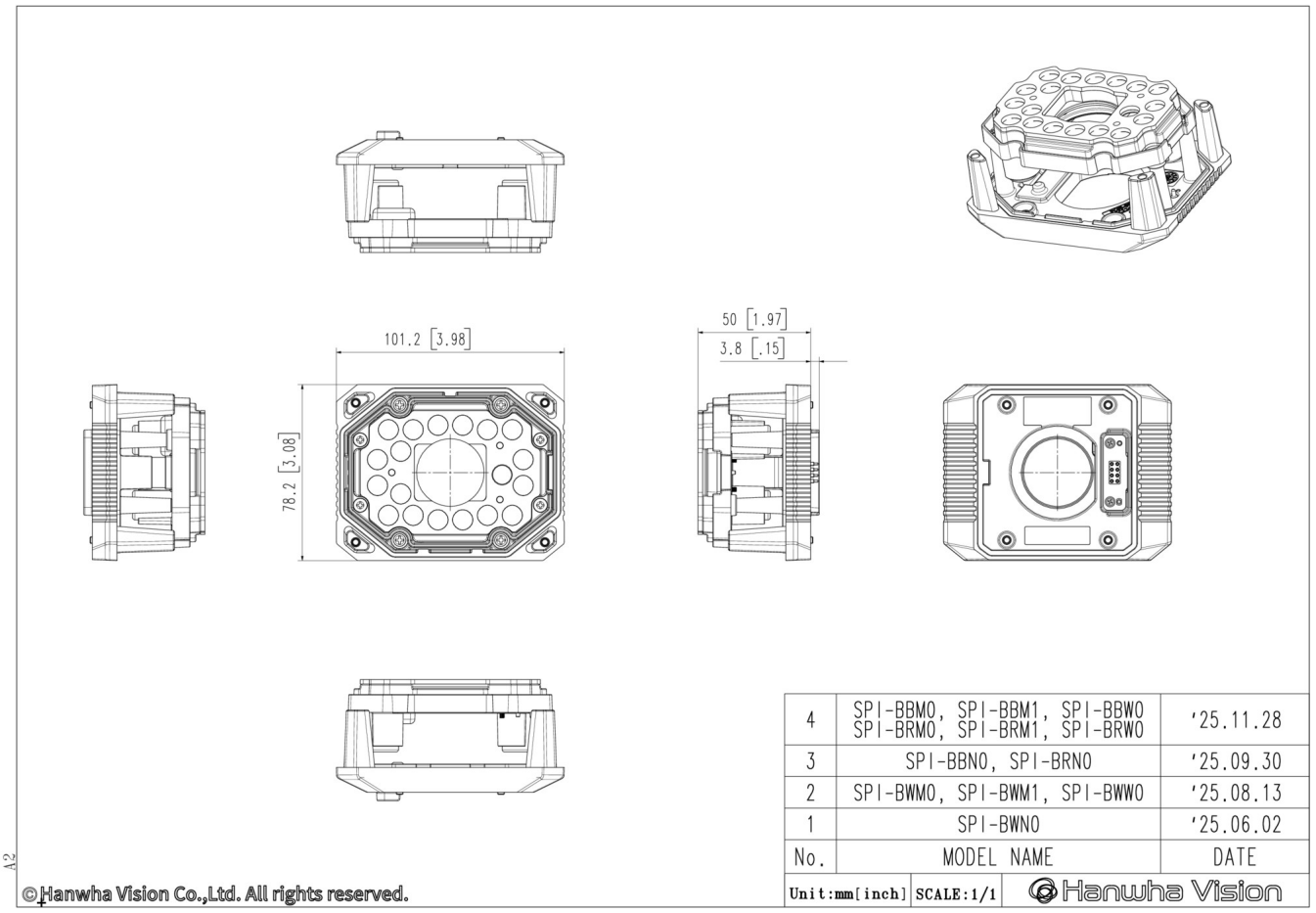

No.	MODEL NAME	DATE
4	SPI-BBM0, SPI-BBM1, SPI-BBW0 SPI-BRM0, SPI-BRM1, SPI-BRW0	'25.11.28
3	SPI-BBN0, SPI-BRN0	'25.09.30
2	SPI-BWM0, SPI-BWM1, SPI-BWW0	'25.08.13
1	SPI-BWN0	'25.06.02

Unit:mm[inch] SCALE:1/1 Hanwha Vision

A2

©Hanwha Vision Co.,Ltd. All rights reserved.

Design and specifications are subject to change without notice. The latest product information / specification can be found at HanwhaVision.com
Hanwha Vision is formerly known as Hanwha Techwin.

© Hanwha Vision CO., LTD. All rights reserved.