

SPI-BWM1

8mm lens için beyaz LED modül aksesuarı

Key Features

- 3MP BCR Kamera için Beyaz LED Modülü, 8mm lens ile mevcut
- Güç Tüketimi: 6.9 W
- LED Rengi: Beyaz
- LED Miktarı: 16EA
- IP66/IP67 (kamera ve ön kapak monte edilmelidir)
- Çalışma Sıcaklığı / Nem: -40°C~+55°C / 0~95% RH
- Desteklenen ürünler: TNS-7000M
- Uyumlu Lens: SLM-5M08

Design and specifications are subject to change without notice. The latest product information / specification can be found at HanwhaVision.com
Hanwha Vision is formerly known as Hanwha Techwin.

© Hanwha Vision CO., LTD. All rights reserved.

SPI-BWM1

8mm lens için beyaz LED modül aksesuarı


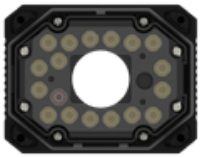


Specifications

Çevresel	
Çalışma Sıcaklığı / Nem Oranı	-40°C~+55°C (TBD) / 0~95% RH
Depolama Sıcaklığı / Nem Oranı	-40°C ~ +60°C (TBD) / Less than 95% RH
Sertifikasyon	FCC, UL, CE, KC, IEC 62471 IP66/IP67(camera and front cover must be assembled)
Elektriksel	
Giriş Voltajı	24 VDC ± 10%
Güç Tüketimi	6.9W
Mekanik	
Ürün boyutları / ağırlık	W101.2mm x D53.8mm x H78.2mm / 200g
Desteklenen ürünler	TNS-7000M
LED	
Renk Sıcaklığı	6,500 K ± 10%
Miktar	16EA
Açı	FWHM : 43° 10-% : 70°

Design and specifications are subject to change without notice. The latest product information / specification can be found at HanwhaVision.com
Hanwha Vision is formerly known as Hanwha Techwin.

© Hanwha Vision CO., LTD. All rights reserved.

SPI-BWM1

8mm lens için beyaz LED modül aksesuarı


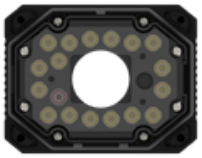


CAD

Unit: mm [inch]

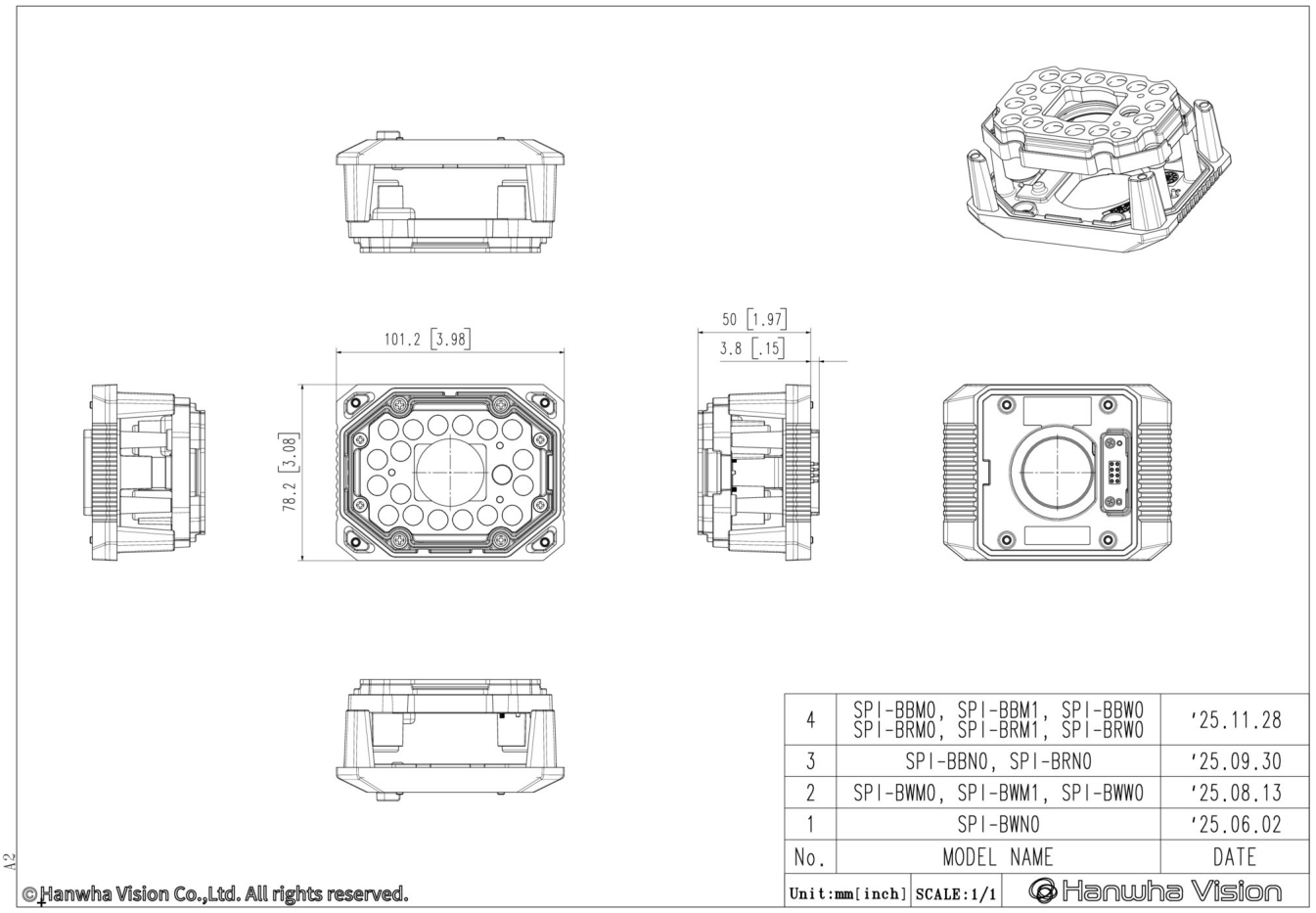

No.	MODEL NAME	DATE
4	SPI-BBM0, SPI-BBM1, SPI-BBW0 SPI-BRM0, SPI-BRM1, SPI-BRW0	'25.11.28
3	SPI-BBN0, SPI-BRN0	'25.09.30
2	SPI-BWM0, SPI-BWM1, SPI-BWW0	'25.08.13
1	SPI-BWN0	'25.06.02

Unit:mm[inch] SCALE:1/1 Hanwha Vision

A2

©Hanwha Vision Co.,Ltd. All rights reserved.

Design and specifications are subject to change without notice. The latest product information / specification can be found at HanwhaVision.com
Hanwha Vision is formerly known as Hanwha Techwin.

© Hanwha Vision CO., LTD. All rights reserved.