

SPI-BWW0

Accesorio de módulo LED blanco para lente de 6 mm

Key Features

- Módulo LED blanco para cámara BCR de 3MP, disponible con lente de 6mm
- Consumo de energía: 6.9 W
- Color del LED: Blanco
- Cantidad de LEDs: 16EA
- IP66/IP67 (la cámara y la cubierta frontal deben estar ensambladas)
- Temperatura / Humedad de funcionamiento: -40°C~+55°C / 0~95% RH
- Productos compatibles: TNS-7000M
- Lente compatible: SLM-5M06

Design and specifications are subject to change without notice. The latest product information / specification can be found at HanwhaVision.com
Hanwha Vision is formerly known as Hanwha Techwin.

© Hanwha Vision CO., LTD. All rights reserved.

SPI-BWW0

Accesorio de módulo LED blanco para lente de 6 mm


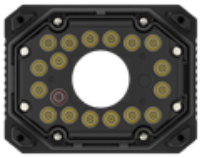


Specifications

Medioambiental

Temperatura / humedad operativas	-40°C~+55°C (TBD) / 0~95% RH
Temperatura / humedad de almacenamiento	-40°C ~ +60°C (TBD) / Less than 95% RH
Certificación	FCC, UL, CE, KC, IEC 62471 IP66/IP67(camera and front cover must be assembled)

Eléctrico

Voltaje de entrada	24 VDC ± 10%
Consumo de corriente	6.9W

Mecánico

Dimensiones y peso del producto	W101.2mm x D53.8mm x H78.2mm / 200g
Productos admitidos	TNS-7000M

LED

Temperatura de color	6,500 K ± 10%
Cantidad	16EA
Ángulo	FWHM : 60° 10-% : 88

Design and specifications are subject to change without notice. The latest product information / specification can be found at HanwhaVision.com
Hanwha Vision is formerly known as Hanwha Techwin.

© Hanwha Vision CO., LTD. All rights reserved.

SPI-BWW0

Accesorio de módulo LED blanco para lente de 6 mm


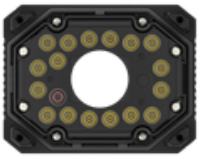


CAD

Unit: mm [inch]

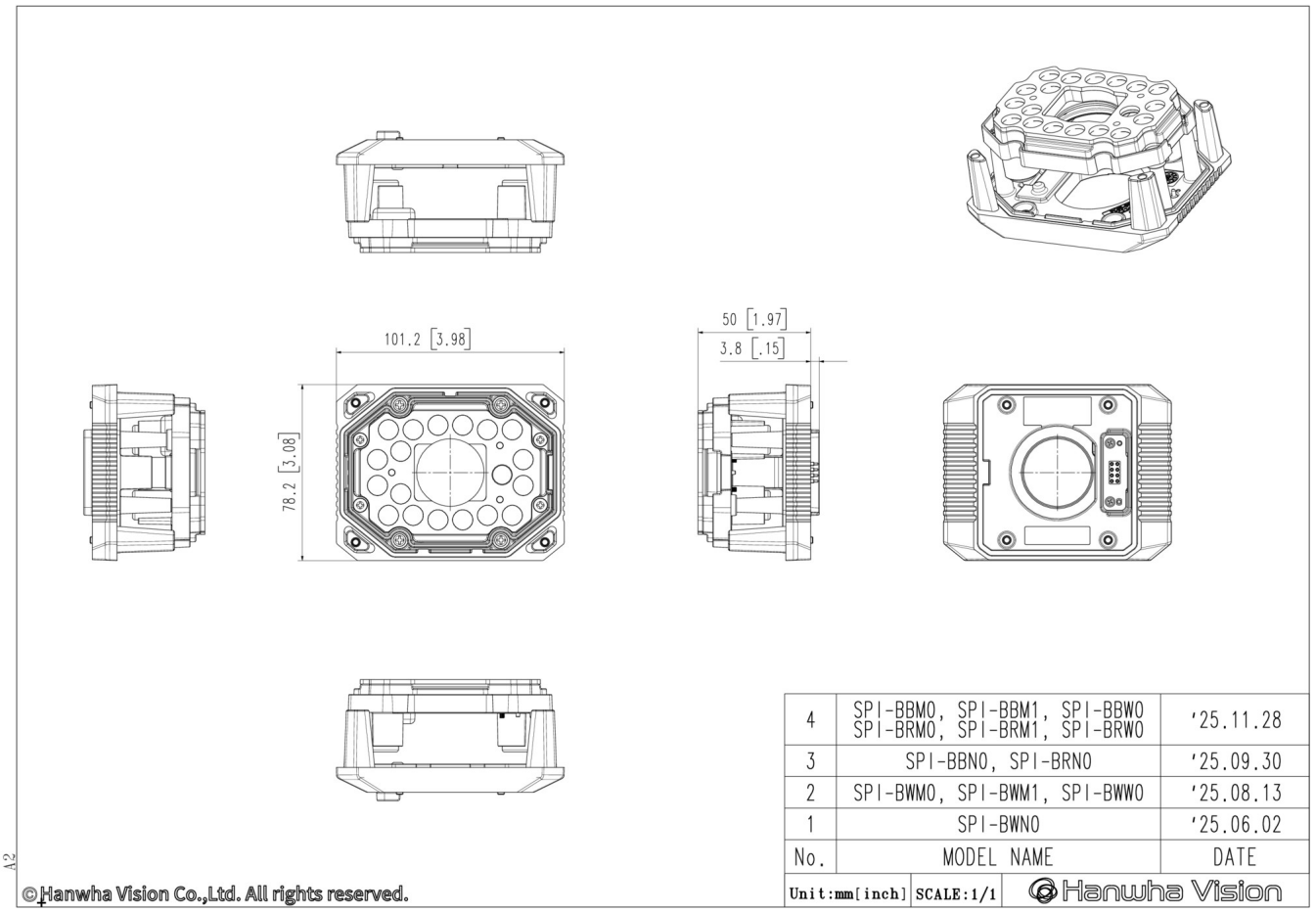

No.	MODEL NAME	DATE
4	SPI-BBM0, SPI-BBM1, SPI-BBW0 SPI-BRM0, SPI-BRM1, SPI-BRW0	'25.11.28
3	SPI-BBN0, SPI-BRN0	'25.09.30
2	SPI-BWM0, SPI-BWM1, SPI-BWW0	'25.08.13
1	SPI-BWN0	'25.06.02

Unit:mm[inch] SCALE:1/1 Hanwha Vision

Design and specifications are subject to change without notice. The latest product information / specification can be found at HanwhaVision.com
Hanwha Vision is formerly known as Hanwha Techwin.

© Hanwha Vision CO., LTD. All rights reserved.