

# SPI-BWW0

BCR Camera LED module

## Key Features

- White LED Module for 3MP BCR Camera
- Power Consumption: 6.9 W
- LED Color: White
- LED Quantity: 16EA
- IP66/IP67(camera and front cover must be assembled)
- Operating Temperature / Humidity: -40°C~+55°C / 0~95% RH
- Compatible Camera: TNS-7000M
  Compatible Lens: SLM-5M06

Design and specifications are subject to change without notice. The latest product information / specification can be found at HanwhaVision.com
Hanwha Vision is formerly known as Hanwha Techwin.

© Hanwha Vision CO., LTD. All rights reserved.

# SPI-BWW0

BCR Camera LED module


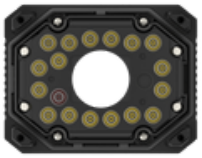


## Specifications

| Environmental | |
|---|---|
| Operating Temperature / Humidity | -40°C~+55°C (TBD) / 0~95% RH |
| Storage Temperature / Humidity | -40°C ~ +60°C (TBD) / Less than 95% RH |
| 認証 | FCC, UL, CE, KC, IEC 62471<br>IP66/IP67(camera and front cover must be assembled) |
| **電源** | |
| Input Voltage | 24 VDC ± 10% |
| 消費電力 | 6.9W |
| **Mechanical** | |
| Product dimensions / weight | W101.2mm x D53.8mm x H78.2mm / 200g |
| Supported products | TNS-7000M |
| **LED** | |
| Color Temperature | 6,500 K ± 10% |
| Quantity | 16EA |
| Angle | FWHM : 60°<br>10-% : 88 |

Design and specifications are subject to change without notice. The latest product information / specification can be found at HanwhaVision.com
Hanwha Vision is formerly known as Hanwha Techwin.

© Hanwha Vision CO., LTD. All rights reserved.

# SPI-BWW0

BCR Camera LED module


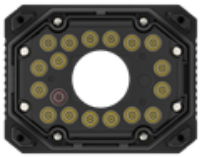


## CAD

**Unit:** mm [inch]

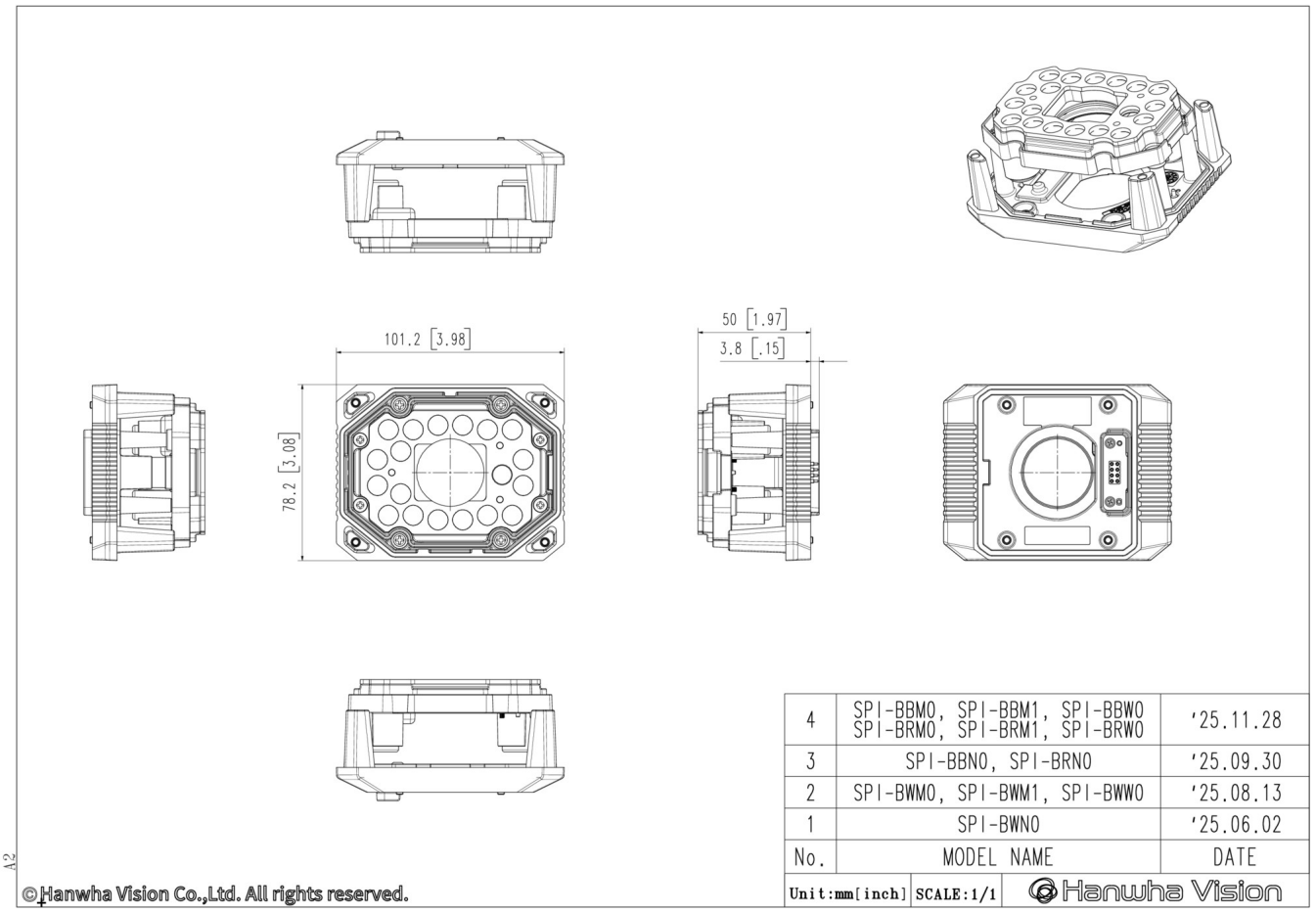


| No. | MODEL NAME | DATE |
|---|---|---|
| 4 | SPI-BBM0, SPI-BBM1, SPI-BBW0 SPI-BRM0, SPI-BRM1, SPI-BRW0 | '25.11.28 |
| 3 | SPI-BBN0, SPI-BRN0 | '25.09.30 |
| 2 | SPI-BWM0, SPI-BWM1, SPI-BWW0 | '25.08.13 |
| 1 | SPI-BWN0 | '25.06.02 |

Unit:mm[inch] SCALE:1/1 Hanwha Vision

A2

©Hanwha Vision Co.,Ltd. All rights reserved.

Design and specifications are subject to change without notice. The latest product information / specification can be found at HanwhaVision.com
Hanwha Vision is formerly known as Hanwha Techwin.

© Hanwha Vision CO., LTD. All rights reserved.