

SPI-BWW0

White LED Module Accessory for 6mm lens

Key Features

- Moduł LED biały dla kamery BCR 3MP, dostępny z obiektywem 6mm
- Zużycie energii: 6,9 W
- Kolor LED: Biały
- Ilość LED: 16 szt.
- IP66/IP67 (kamera i przednia pokrywa muszą być zmontowane)
- Temperatura / wilgotność pracy: -40°C~+55°C / 0~95% RH
- Obsługiwane produkty: TNS-7000M
- Kompatybilny obiektyw: SLM-5M06

Design and specifications are subject to change without notice. The latest product information / specification can be found at HanwhaVision.com
Hanwha Vision is formerly known as Hanwha Techwin.

© Hanwha Vision CO., LTD. All rights reserved.

SPI-BWW0

White LED Module Accessory for 6mm lens


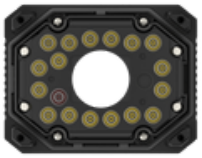


Specifications

Środowiskowe

Temperatura/wilgotność pracy	-40°C~+55°C (TBD) / 0~95% RH
Temperatura/wilgotność przechowywania	-40°C ~ +60°C (TBD) / Less than 95% RH
Certyfikacja	FCC, UL, CE, KC, IEC 62471 IP66/IP67(camera and front cover must be assembled)

Elektryczne

Napięcie wejściowe	24 VDC ± 10%
Pobór mocy	6.9W

Mechaniczne

Wymiary / waga produktu	W101.2mm x D53.8mm x H78.2mm / 200g
Obsługiwane produkty	TNS-7000M

LED

Temperatura barwowa	6,500 K ± 10%
Ilość	16EA
Kąt	FWHM : 60° 10-% : 88

Design and specifications are subject to change without notice. The latest product information / specification can be found at HanwhaVision.com
Hanwha Vision is formerly known as Hanwha Techwin.

© Hanwha Vision CO., LTD. All rights reserved.

SPI-BWW0

White LED Module Accessory for 6mm lens


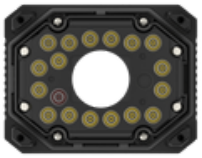


CAD

Unit: mm [inch]

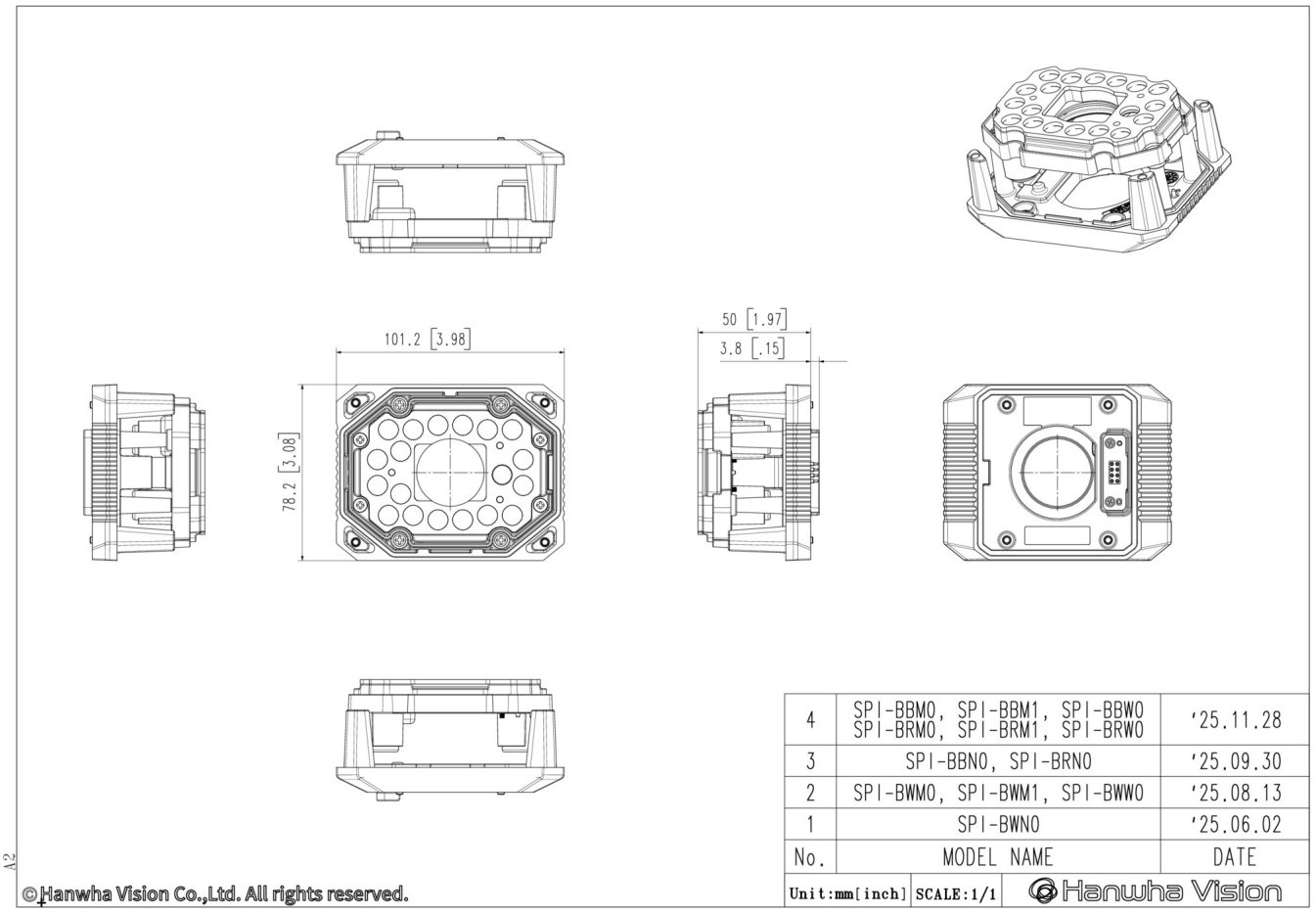

No.	MODEL NAME	DATE
4	SPI-BBM0, SPI-BBM1, SPI-BBW0 SPI-BRM0, SPI-BRM1, SPI-BRW0	'25.11.28
3	SPI-BBN0, SPI-BRN0	'25.09.30
2	SPI-BWM0, SPI-BWM1, SPI-BWW0	'25.08.13
1	SPI-BWN0	'25.06.02

Unit:mm[inch] SCALE:1/1 Hanwha Vision

A2

©Hanwha Vision Co.,Ltd. All rights reserved.

Design and specifications are subject to change without notice. The latest product information / specification can be found at HanwhaVision.com
Hanwha Vision is formerly known as Hanwha Techwin.

© Hanwha Vision CO., LTD. All rights reserved.