SAMSUNG

Super High Resolution UTP Dome Camera **SUD-2080F** User Guide

Before installing and operating this product,
please read this manual thoroughly.

ENGLISH

Before operating the camera, confirm the camera model and correct input power voltage. To help you understand this manual thoroughly, we'll introduce our model description.

■ SUD-2080F SERIES

- NTSC MODEL
  SUD-2080FN
- PAL MODEL
  SUD-2080FP

■ MODEL DESCRIPTION

- SUD-2080FX

SIGNAL SYSTEM

- SIGNAL SYSTEM
  N → NTSC MODEL
  P → PAL MODEL

The lightning flash with an arrowhead symbol, within an equilateral triangle is intended to alert the user to the presence of uninsulated “dangerous voltage” within the product's enclosure that may be of sufficient magnitude to constitute a risk of electric shock to persons.

The exclamation point within an equilateral triangle is intended to alert the user to the presence of important operating and maintenance (servicing) instructions in the literature accompanying the appliance.

INFORMATION - This equipment has been tested and found to comply with limits for a Class A digital device, pursuant to part 15 of the FCC Rules. These limits are designed to provide reasonable protection against harmful interference when the equipment is operated in a commercial environment. This equipment generates, uses, and can radiate radio frequency energy and, if not installed and used in accordance with the instruction manual, may cause harmful interference to radio communications.
Operation of this equipment in a residential area is likely to cause harmful interference in which case the user will be required to correct the interference at his own expense.

WARNING - Changes or modifications not expressly approved by the manufacturer could void the user's authority to operate the equipment.

WARNING : To prevent electric shock and risk of fire hazards:

◆ Do NOT use power sources other than that specified.
◆ Do NOT expose this appliance to rain or moisture.

This installation should be made by a qualified service person and should conform to all local codes.

Contents

- Features 5
- Warnings & Cautions 6
- Precautions 7
- Components and Accessories 9
- Overview 9
- Installation 11
  - ■ Installation 11
    - · Recessed installation of attachments 12
  - ■ Adjust the panning, tilting and rotate mechanism while checking the position on the monitor 14
  - ■ Adjusting varifocal lens zoom and focus 15
  - ■ System Diagram 16
    - · UTP Power Supply Link Setup 16
    - · UTP CABLE 17
  - ■ RJ-45 Connector Schematic Diagram 18
  - ■ Using Coaxial Communications 19
- Operating Your Camera 20
  - ■ Menu Configuration 20
  - ■ Menu Setup 20
    - · LENS 21
    - · EXPOSURE 22
    - · White Bal (White Balance) 24
    - · SSDR (Samsung Super Dynamic Range) 25
    - · BACKLIGHT 25
    - · SSNR3 27
    - · DAY/NIGHT 28
    - · SPECIAL 29
    - · EXIT 35
- Troubleshooting 36
- Specifications 37
- Dimension 38

Features

High Resolution

By adopting a diagonal 6mm(1/3") 410,000 (NTSC) pixel, 470,000(PAL) pixel SONY CCD, the camera produces clear picture quality with a horizontal resolution of 600 TV lines in color and a horizontal resolution of 700 TV lines in B/W mode.

Excellent Sensitivity

The built-in high sensitivity COLOR CCD produces a clear image.
- Color : 0.15Lux(50IRE, @F1.2), 0.0003LUX (SENS-UP, x512)
- B/W : 0.001Lux(50IRE, @F1.2), 0.000002LUX (SENS-UP, x512)

SSNR3 (Samsung Super Noise Reduction) Function

The high-performance W-V DSP chip effectively removes low-light gain noise and afterimage to provide clear images even in dark environments.

DAY&NIGHT(ICR)

This camera has a function that automatically selects the mode that is appropriate for daytime or night-time conditions.
The COLOR mode operates in daytime conditions to provide optimum colors, and B/W mode operates in night-time conditions to enhance the definition of the image.

Motion Detection

Since the camera detects motion without any additional external sensor, you can monitor activity more efficient.

UTP TX

One UTP cable transmits power for the camera, video signals and RS-485 data; installation is easy and clean. (TIA/EIA-568B)

SSDR (Samsung Super Dynamic Range)

For images with high contrast between bright and dark areas from difficult lighting conditions such as backlighting, this camera selectively illuminates darker areas while retaining the same light level for brighter areas to even out the overall brightness.

DIS (Digital Image Stabilizer)

The DIS function compensates for any camera movement, to produce more stable pictures.

Communication

RS-485 and Coaxial communication methods are supported.
- RS-485 Communications : SAMSUNG-T, SAMSUNG-E, PELCO-D, PELCO-P, BOSCH, HONEYWELL, VICON, PANASONIC.
- Coaxial Communications : Pelco Coaxitron

Miscellaneous Functions

HLC(High Light Compensation), SENS-UP, FLIP (H/V-REV), D-ZOOM, SHARPNESS and PRIVACY functions are provided.

OSD

The camera's OSD is complimented by 18 languages.
- NTSC : English, Korean, Japanese, Spanish, French, Portuguese, Taiwanese
- PAL : English, Chinese, German, Italian, French, Spanish, Russian, Czech, Polish, Romanian, Serbian, Swedish, Danish, Turkish, Portuguese

Samsung Techwin cares for the environment at all product manufacturing stages to preserve the environment, and is taking a number of steps to provide customers with more environment-friendly products.The Eco mark represents Samsung Techwin's will to create environment-friendly products, and indicates that the product satisfies the EU RoHS Directive.

Warnings & Cautions

This information is provided to ensure your safety and to prevent any losses, financial or otherwise. Please read it carefully and use the product accordingly.

* For product inquiries, please contact the retail shop where you bought the camera. The use of equipment such as an aerial ladder while providing after-sales service shall be at your expense.
* Separate the power plug during a thunder storm.
* This product is support equipment for surveillance system. Therefore, we can't compensate for material loss and/or personal injuries by robbery, fire, natural disaster or other such events.

Warning/Attention/Special Mark Messages

	Ignoring this information may result in material loss and/or serious personal injuries including death.		Ignoring this information may result in material loss and/or a slight injuries.
	Indicates "Never Allowed."		Indicates "No Disassembling."

Correct Disposal of This Product
(Waste Electrical & Electronic Equipment)

(Applicable in the European Union and other European countries with separate collection systems)

This marking shown on the product or its literature, indicates that it should not be disposed with other household wastes at the end of its working life. To prevent possible harm to the environment or human health from uncontrolled waste disposal, please separate this from other types of wastes and recycle it responsibly to promote the sustainable reuse of material resources.

Household users should contact either the retailer where they purchased this product, or their local government office, for details of where and how they can take this item for environmentally safe recycling.

Business users should contact their supplier and check the terms and conditions of the purchase contract.
This product should not be mixed with other commercial wastes for disposal.

Precautions

Do not install under extreme temperature conditions.

Use only under temperature conditions between -10°C and +50°C. Provide good ventilation when using in high temperature conditions.

Do not install in high humidity environment.

May lower image quality.

Do not install under unstable lighting conditions.

Severe lighting changes or flickering may hinder normal camera operation.

Avoid touching the camera lens.

The lens is the most important component of the camera. Be careful not to smear it with fingerprints.

Do not drop the camera or subject it to physical shock.

May cause a product malfunction.

Never keep the camera face to strong light directly.

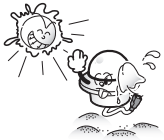

May damage the CCD.

Precautions

Do not expose the camera to radioactivity.

If exposed to radioactivity, the CCD will fail.

Do not expose the camera to rain or other types of liquids.

May cause a product malfunction.Wipe dry any liquids. Liquids may contain minerals that are corrosive to electronic components.

When connecting cables, be sure to read the instructions carefully and follow each step as instructed.

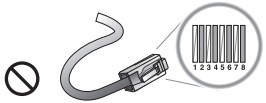

Failure to do so may result in critical system damage.

Notes

- Exposure to a spotlight or an object emitting strong light may cause smear or blooming.
- Ensure that the power source complies with normal specifications before supplying it to the camera.

Components and Accessories

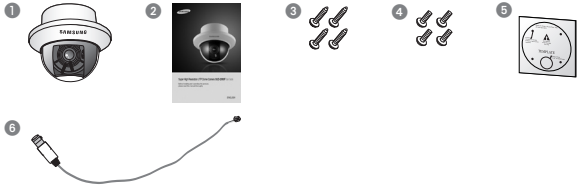

1. Super High Resolution UTP Dome Camera SUD-2080F
2. Instruction Manual
3. M4 Tapping Screw 4EA
4. M4 Machine Screw 4EA
5. Template
6. Installation Video Output Cable

Overview

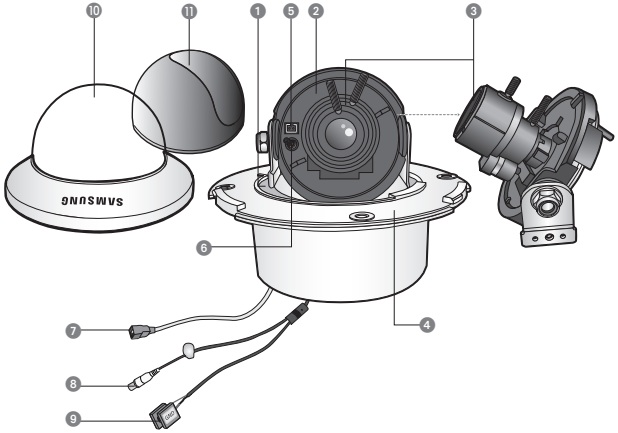

❶ **Pan Bracket :** Control panning angle of camera.

❷ **Rotate Body :** Control rotating angle of camera.

❸ **x3.6 Vari-focal Lens Module :** 2.8 ~ 10.0mm(F1.2).

❹ **Flush Housing**

❺ **Video Output Terminal to Monitor**

❻ **Function Setup switch :** Display the menu on the screen and move the cursor to four directions to confirm status or after changing a selected item.

❼ **UTP Cable :** For supplying AC 24V / AC28V power to the camera and transmitting video signals.

❽ **Video Output Jack :** Video signals are output through this port. Connect this port to the Video IN port of a monitor.

❾ **Power input terminal :** If the UTP cable cannot be connected for power supply (distance over 300m(1000ft), for example), this cable is used instead for connecting DC 12V / AC 24V power to the camera.

❿ **Dome Cover**

⓫ **Shield Case**

Installation

Notes

- **The installation should be done by qualified service personnel or sytem installers.**
- **If the ceiling material is not strong enough to hold the installation screws, the camera may fall off. Reinforce the ceiling as needed.**

1) Separate the dome cover by rotating anti-clockwise.
2) Separate the shield case by pulling from the camera body.

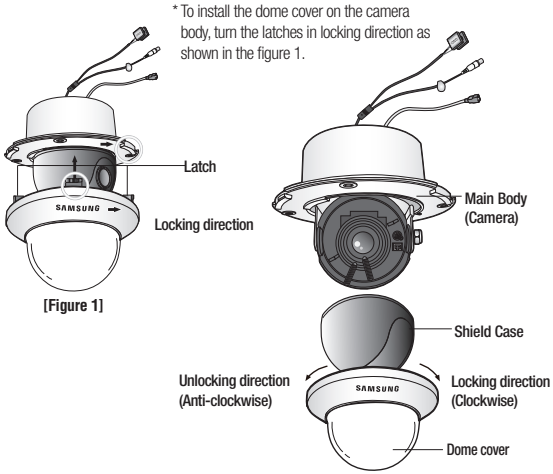

[Figure 1]

Installation

Recessed installation of attachments

1) Place template to get on the ceiling. Drill a hole of 95mm in the template. Drop the camera cables down from the ceiling through the hole. Drill another but a small hole for a screw that will be used to secure the camera.

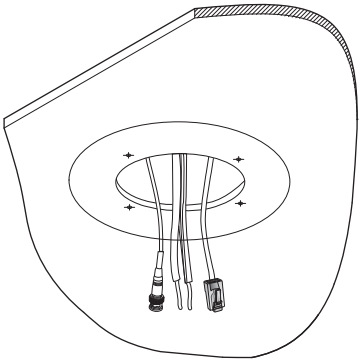

2) Connect the camera cables, fit the camera body to the hole, and then secure the camera body in the ceiling using the M4 tapping screws.

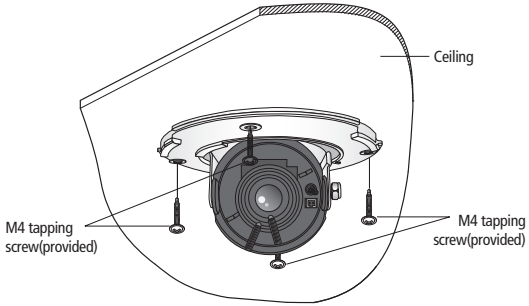

3) After installation and adjustment of the camera are complete, place the shield case on the camera body. Secure the dome cover by turning it clockwise.

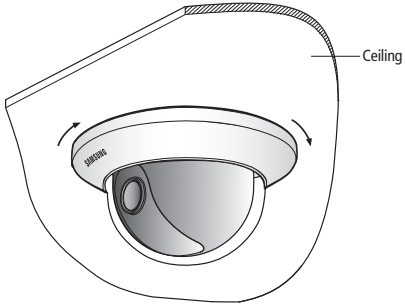

Adjust the panning, tilting and rotate mechanism while checking the position on the monitor

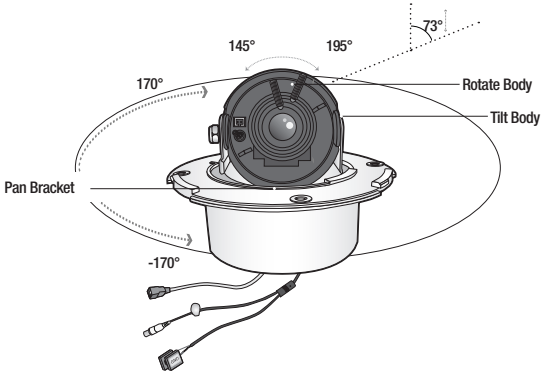

1) You can adjust camera to any direction by using Pan, Tilt, Rotate mechanism.
   - Pan Bracket moves by 170° in each direction or 340° on the whole.
   - Tilt Body covers 73° in each direction or 146° in total.
   - The angle range of the Rotate Body is the same as that of the Pan Bracket. But one direction range is 195° and another is 145°
2) Methods of adjustment
   - The case of wall installation
     1. After mounting the camera on a wall, adjusting the panning angle so that the camera can face the direction to monitor when tilted.
     2. Adjust the tilting angle by rotating the tilt base.
     3. Loosen the rotate base hold screw and adjust rotate base for the best view.
     4. Tighten the rotate base hold screw.
   - The case of ceiling installation
     1. After mounting the camera on a ceiling, adjusting the panning angle to the correct viewing position by rotating the pan base.
     2. Adjust the tilting angle by rotating the tilt base.
     3. Loosen the rotate base hold screw and adjust rotate base for the best view.
     4. Tighten the rotate base hold screw.

Adjusting varifocal lens zoom and focus

1) Unlock the zoom(focus) handle by turning anti-clockwise.
2) Adjust the zoom(focus) by moving the handle to WIDE(FAR) or TELE(NEAR).
3) After adjustment, tighten the zoom (or the focus) handle, taking care that the adjusted position does not change.

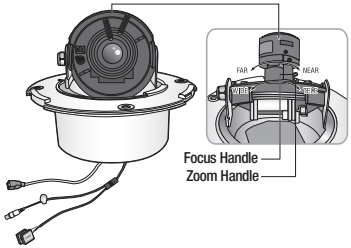

Installation

System Diagram

UTP Power Supply Link Setup

1. SUD-2080F ⟶ 4Ch Power Supply ⟶ 4Ch Receiver ⟶ DVR/Monitor/Controller
   The maximum power transmission distance for the camera is 300m(1000ft), and the distance between the camera and the 4ch Receiver cannot exceed 900m(3000ft).

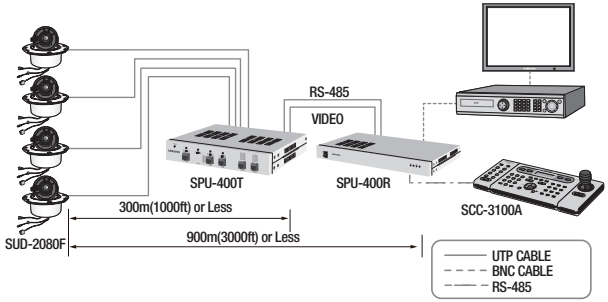

2. UTP Receiver Link Setup(Additional Power input is needed)
   SUD-2080F ⟶ 1Ch Passive Receiver ⟶ DVR ⟶ Monitor

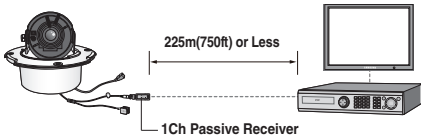

Notes

- Using the product with third-party UTP peripherals may result in degradation of product function and performance.
- Attenuation and distortion in signal may occur if the maximum transmission distance is exceeded. Please note that depending on the installation environment/condition, the signal may become attenuated and distorted and cause the camera to function incorrectly even when the transmission distance is within the maximum.
- If using RS-485 communication, please use the SAMSUNG-T, SAMSUNG-E, PELCO-D, PELCO-P, BOSCH, HONEYWELL, VICON and PANASONIC Protocol.
- If you are using the 1Ch Passive Receiver system setup, please connect the adapter (AC 24V or DC 12V) directly to the camera.

UTP CABLE

The camera uses UTP cable for transmitting video signals, power and transferring RS-485 control data.(TIA/EIA-568B)

No.	Line Color	Camera to Power Supply	Power Supply to Receiver	
1	White+Orange	VIDEO (+)	CH1	VIDEO (+) / RS-485 (+)
2	Orange	VIDEO (-)		VIDEO (-) / RS-485 (-)
3	White+Green	RS485 (+)	CH2	VIDEO (+) / RS-485 (+)
4	Blue	POWER (-)		VIDEO (-) / RS-485 (-)
5	White+Blue	POWER (+)	CH3	VIDEO (+) / RS-485 (+)
6	Green	RS485 (-)		VIDEO (-) / RS-485 (-)
7	White+Brown	POWER (+)	CH4	VIDEO (+) / RS-485 (+)
8	Brown	POWER (-)		VIDEO (-) / RS-485 (-)

Installation

RJ-45 Connector Schematic Diagram

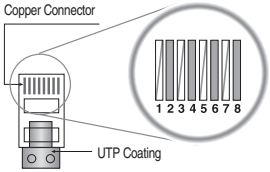

No.	Line Color	Camera to Power Supply	Power Supply to Receiver	
1	White+Orange	VIDEO (+)	CH1	VIDEO (+) / RS-485 (+)
2	Orange	VIDEO (-)		VIDEO (-) / RS-485 (-)
3	White+Green	RS485 (+)	CH2	VIDEO (+) / RS-485 (+)
4	Blue	POWER (-)		VIDEO (-) / RS-485 (-)
5	White+Blue	POWER (+)	CH3	VIDEO (+) / RS-485 (+)
6	Green	RS485 (-)		VIDEO (-) / RS-485 (-)
7	White+Brown	POWER (+)	CH4	VIDEO (+) / RS-485 (+)
8	Brown	POWER (-)		VIDEO (-) / RS-485 (-)

The SUD-2080F uses UTP cable to receive its power (AC24V/AC28V) from the Power Supply. Therefore, a separate adapter is not required. Please refer to the RJ-45 Connector Schematic Diagram.

Using Coaxial Communications

- Coaxial Communications System
- OSD Control method

CAMERA	DVR	CONTROLLER
SET	MENU/ENTER	OSD KEY
UP	UP KEY	JOYSTICK UP
DOWN	DOWN KEY	JOYSTICK DOWN
LEFT	LEFT KEY	JOYSTICK LEFT
RIGHT	RIGHT KEY	JOYSTICK RIGHT

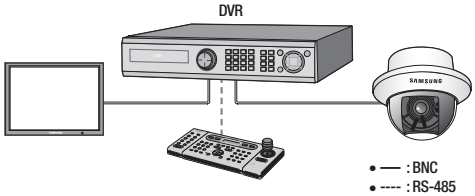

- Video Cable

  The camera's video output port is connected to the monitor with a BNC coaxial cable, shown below : If the distance between the camera and the monitor exceeds the recommended maximum, please use an auxiliary video amp.

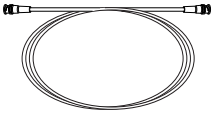

Distance	Recommended Cable Specification
300m	3C2V(RG-59/U)
450m	5C2V(RG-6/U)
600m	7C2V(RG-11/U)

Notes

- It is recommended that pure copper coax cable is used and not copper coated steel, as this will cause issues with the communication over the coaxial cable.

Operating Your Camera

Menu Configuration

MAIN SETUP			
LENS	●DC		
EXPOSURE	●BRIGHTNESS ●SENS-UP	●SHUTTER ●RETURN	●AGC
WHITE BAL	●ATW ●MANUAL	●OUTDOOR ●AWC→SET	●INDOOR
SSDR	●OFF	●ON	
BACKLIGHT	●OFF	●BLC	●HLC
SSNR3	●ON	●OFF	
DAY/NIGHT	●AUTO	●COLOR	●B/W
SPECIAL	●IMAGE ADJ ●SYNC ●COMM ADJ	●MONITOR ●MOTION DET ●LANGUAGE	●CAM TITLE ●PRIVACY ●RETURN
EXIT	●SAVE	●NOT SAVE	●RESET

Menu Setup

Use the Function Setup switch within the camera.

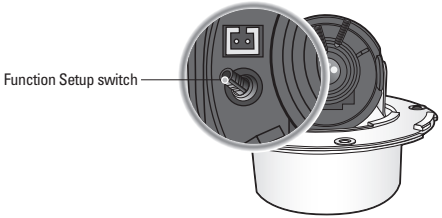

1. Press the Function Setup switch.
   - Main setup menu is displayed on the monitor screen.

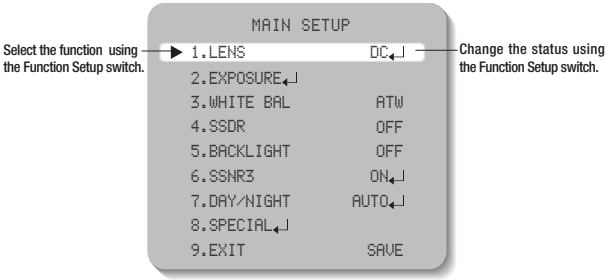

2. Select a desired function using the Function Setup switch.
   - Place the cursor over a desired item.
3. Set up a selected item by using the Function Setup switch.
4. To finish the setting, select 'EXIT' and press the Function Setup switch.

Notes

- An item with the ↵ icon also has sub menus. To select a sub menu, select an item with the icon and press the Function Setup switch.
- An item with the - - - icon is unavailable due to function settings.

LENS

Using this function, you can control the screen brightness.

1. When the SETUP menu screen is displayed, select 'LENS' by using the Function Setup switch so that the arrow indicates 'LENS'.

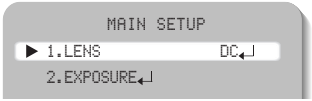

Operating Your Camera

2. The Lens mode has sub menu site as listed below.
   - BRIGHTNESS : Adjusts the video brightness.
   - FOCUS ADJ : To adjust the DC lens focus correctly, you must activate the Focus Settings mode. To a Activate the Focus Settings mode, adjust the lens focus, and then deactivate the settings mode.

➲ You can adjust the minimum shutter and maximum value of ESC shutter mode.

EXPOSURE

```
        MAIN SETUP
  1.LENS              DC↵
▶ 2.EXPOSURE↵
  3.WHITE BAL         ATW
```

1. When the SETUP menu screen is displayed, select 'EXPOSURE' by using the Function Setup switch so that the arrow indicates 'EXPOSURE'.
2. Select a desired mode using the Function Setup switch.

```
      EXPOSURE SETUP
▶ 1.BRIGHTNESS ||||||||||||||||| 25
  2.SHUTTER                  ---
  3.AGC                     HIGH
  4.SENS-UP                  OFF
  5.RETURN ↵
```

➲ SHUTTER : You can select the shutter.
- --- : Shutter speed is fixed at 1/60sec(1/50sec).
- ESC : Select this to control the shutter speed automatically. If ESC is selected, the shutter speed is automatically controlled depending on the ambient illumination of the subject.
- MANUAL : You can control shutter speed manually.
  (NTSC MODEL : 1/60sec~1/120,000sec, PAL MODEL : 1/50sec~1/120,000sec)
- A.FLK : Select this when you experience picture flicker, this happen when there is a clash with the installed lighting frequency.

Notes

- Set the shutter mode to - - - if color rolling occurs.
- When the SHUTTER is set to ESC after selecting the Internal Synchronization Type, the picture may become unstable if the camera faces a bright fluorescent light. Therefore, take care when choosing the installation position.
- When the SHUTTER is set to MANUAL or A.FLK mode, SENS-UP will be disabled.

➲ AGC(AUTO GAIN CONTROL) : The higher the gain level, the brighter the screen - but the higher the noise.
- HIGH : Allows automatic gain control from 5.3dB to 37dB.
- OFF : Deactivates the AGC function.
- LOW : Allows automatic gain control from 5.3dB to 32dB.

➲ SENS-UP : When it is night or dark, the camera automatically detects the light level and maintains a clear picture if this mode is activated.
- OFF : Deactivates the SENS-UP function.
- AUTO : Activates the SENS-UP function.

Notes

- If you set the Function Setup switch to 'AUTO' mode, You can adjust the brightness by increasing or decreasing the shutter speed. (x2 ~ x512)
- Note that the higher the zoom level, the brighter the screen, but the more likely it is that an after-image will appear.
- Although Noise, Spots, and Whitish symptoms may occur in SENS-UP operation when the zoom level is increased, this is normal.

➲ RETURN : Select this to save the changes in the EXPOSURE menu and return to the SETUP menu.

White Bal (White Balance)

Use the White Balance function to adjust the screen color.

1. When the SETUP menu screen is displayed, select 'White Bal' by using the Function Setup switch so that the arrow indicates 'White Bal' .
2. Select a desired mode using the Function Setup switch.

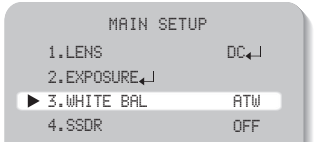

※ Select one of the following 5 modes, as appropriate for your purpose.

- ➲ ATW : Select this when the color temperature is between 1,700°K and 11,000°K.
- ➲ OUTDOOR : Select this when the color temperature is between 1,700°K and 11,000°K. (sodium light inclusion)
- ➲ INDOOR : Select this when the color temperature is between 4,500°K and 8,500°K.
- ➲ MANUAL : Select this to fine-tune White Balance manually. Set White Balance first by using the ATW or AWC mode. After that switch to MANUAL mode, fine-tune the White Balance and the Function Setup switch.
- ➲ AWC →SET : To find the optimal luminance level for the current environment, point the camera towards a sheet of white paper and press the Function Setup switch. If the environment changes, readjust it.

Notes

- White Balance may not work properly under the following conditions. In this case select the AWC mode.
  1. When the color temperature of the environment surrounding the subject is out of the control range (e.g. clear sky or sunset).
  2. When the ambient illumination of the subject is dim.
  3. If the camera is directed towards a fluorescent light or is installed in a place where illumination changes dramatically, the White Balance operation may become unstable.

SSDR (Samsung Super Dynamic Range)

SSDR illuminates darker areas of an image while retaining the same light level for brighter areas to even out the overall brightness of images with high contrast between bright and dark areas.

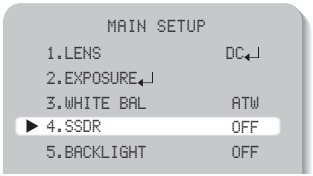

1. When the SETUP menu screen is displayed, select 'SSDR' by using the Function Setup switch so that the arrow indicates 'SSDR'.
2. Use the Function Setup switch to change the SSDR level in the sub menu according to the contrast between bright and dark areas.

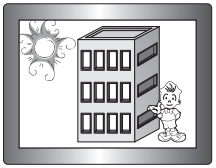

SSDR ON

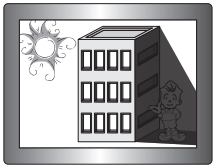

SSDR OFF

BACKLIGHT

The SUD-2080F is designed so that it delivers a distinctive subject and background at the same time, even when the subject is in backlight, by adopting a function of the proprietary W-V DSP chip.

1. When the SETUP menu screen is displayed, select 'BACKLIGHT' by using the Function Setup switch so that the arrow indicates 'BACKLIGHT'.

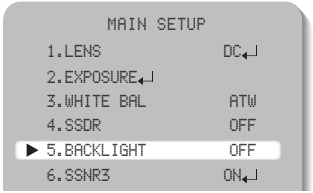

2. Select a desired mode using the Function Setup switch depending on the camera purpose.
   - OFF : Not being used
   - BLC : Enables a user to select a desired area on a picture and view that area more clearly.
     - LEVEL : Adjust level of the BLC function.
     - TOP/BOTTOM/LEFT/RIGHT : Adjust the area to be enhanced.
   - HLC (High Light Compensation) :
     If the scene contains extremely bright light areas such as; from car headlight, the light can mask out much of the on-screen detail.
     - LEVEL : Adjust level of the HLC function.
     - LIMIT : Enable to change the operating condition.
     - MASK COLOR/TONE : Change the color / brightness of the masking area. (Black, Red, Blue, Cyan, Magenta)
     - TOP/BOTTOM/LEFT/RIGHT : Adjust the area to be enhanced.
3. Select a desired mode using the Function Setup switch.
   - Select 'BLC' to adjust the area to be enhanced then adjust the level.
   - HLC : Enable the user to change the level, limit, mask color/tone and area.

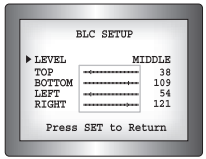

Notes

- Because there can be a difference in the effectiveness of HLC according to the amount of light area in the screen, optimize the installation angle for the best HLC performance.
- When dark, the HLC is only activated when a bright light exceeding a specific size. (In NIGHT ONLY mode.)
- The HLC is not activated in day light or when bright light is not present at night. (In NIGHT ONLY mode.)

SSNR3

This function reduces the background noise in a low luminance environment.

1. When the SETUP menu screen is displayed, select 'SSNR3' by using the Function Setup switch so that the arrow indicates 'SSNR3'.

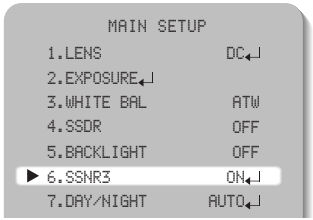

2. Select a desired mode using the Function Setup switch.
   - ON : Activates SSNR3 so that noise is reduced.
   - OFF : Deactivates SSNR3. Noise is not reduced.
3. Set the SSNR3 mode to 'ON' and press the Function Setup switch. Then you can adjust the noise reduction level.

Notes

- You cannot set the SSNR3 to 'ON' or 'OFF' when the AGC mode of the EXPOSURE menu is 'OFF'.
- When adjusting the noise reduction level in the SSNR3 mode, remember that the higher the level set, the more the noise level will be reduced, as will the brightness of the image.

DAY/NIGHT

You can display pictures in color or in black and white.

1. When the SETUP menu screen is displayed, select 'DAY/NIGHT' by using the Function Setup switch so that the arrow indicates 'DAY/NIGHT'.

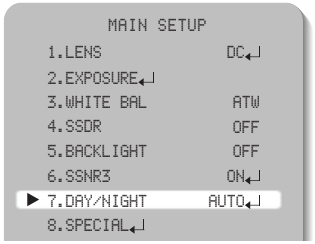

2. Select a desired mode using the Function Setup switch according to the picture display you want.
   - AUTO : The mode is switched to 'Color' in a normal environment, but switches to 'B/W' mode when ambient illumination is low. To set up the switching time for AUTO mode, press the Function Setup switch.
     You can turn on or off the burst signal on B/W mode.

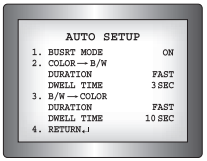

- DURATION : You can select brightness of illumination about changing the day/night mode.
- DWELL TIME : You can select the duration time about changing the day/night mode.
  → 3s, 5s, 7s, 10s, 15s, 20s, 30s, 40, 60s
- COLOR : The picture is always displayed in color.
- B/W : The picture is always displayed in black and white.
  You can turn on or off the burst signal on B/W mode.

Notes

- When AGC in the EXPOSURE menu is 'OFF', '---' mode operates as selecting 'AUTO' mode cannot be selected.

SPECIAL

1. When the SETUP menu screen is displayed, select 'SPECIAL' by using the Function Setup switch so that the arrow indicates 'SPECIAL'.

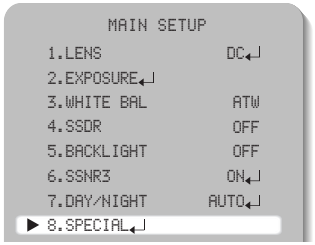

Operating Your Camera

2. Select a desired mode using the Function Setup switch.

```
SPECIAL
▶ 1. IMAGE ADJ↵
  2. MONITOR          LCD↵
  3. CAM TITLE         OFF
  4. SYNC              INT
  5. MOTION DET        OFF
  6. PRIVACY           OFF
  7. COMM ADJ↵
  8. LANGUAGE       ENGLISH
  9. RETURN↵
```

➲ IMAGE ADJ :

1) When the SPECIAL menu screen is displayed, select 'IMAGE ADJ' by using the Function Setup switch so that the arrow indicates 'IMAGE ADJ'.

2) Select a desired mode using the Function Setup switch.

```
IMAGE SETUP
▶ 1. V-REV            OFF
  2. H-REV            OFF
  3. D-ZOOM           OFF
  4. DIS              OFF
  5. FONT COLOR      WHITE
  6. SHARPNESS        ON↵
  7. RETURN↵
```

- V-REV : You can flip the picture vertically on the screen.
- H-REV : You can flip the picture horizontally on the screen.
- D-ZOOM : You can use a digital zoom of x1 ~ x16.
- DIS (Digital Image Stabilizer) : This function mitigates any picture movement due to external factors such as wind.
- FONT COLOR : You can change the OSD font color. (White, Yellow, Green, Red, Blue)
- SHARPNESS : As you increase this value, the picture outline becomes stronger and clearer. Adjust this value appropriately depending on the sharpness of the picture.
- RETURN : Select this to save the settings for the IMAGE ADJ menu and to return to the SPECIAL menu.

Notes

- When the V-REV or H-REV mode is enabled, the text on the screen does not flip.
- If you increase the SHARPNESS level too high, the picture may become distorted or noise may appear.
- As the DIS function uses the digital zoom, the camera's resolution will decrease.
- DIS doesn't operate when background illumination is too low.
- DIS doesn't operate when object pattern is monotonic as like sky or white wall.

➲ Monitor : Please change the settings value of video appropriate to your monitor.

```
LCD MONITOR
▶ GAMMA              0.55
  PED LEVEL ----+---------- 17
  COLOR GAIN ----------+--- 50
  RESET
  Press SET to Return
```

- LCD : Please select this menu item when using an LCD monitor. You can change the gamma, PED level and color gain in the sub menus.
- USER : Please use this menu item when using a monitor other than standard ones. You can change the gamma, PED level, and color gain in the sub menus.
- CRT : Please select this menu item when using a CRT monitor. You can change the PED level, color gain in the sub menus.

➲ CAM TITLE : If you enter a title, the title will appear on the monitor.

1) If the SPECIAL menu screen is displayed, use the Function Setup switch so that the arrow indicates 'CAM TITLE'.

2) Set it to 'ON' by using the Function Setup switch.

3) Press the Function Setup switch.

4) Use the Function Setup switch to move to a desired letter and select the letter by pressing the Function Setup switch. Repeat this to enter multiple letters. You can enter up to 15 letters.

```
CAMERA TITLE SETUP
 ABCDEFGHIJKLM
 NOPQRSTUVWXYZ
 abcdefghijklm
 nopqrstuvwxyz
 -.0123456789
 ←→CLR POS END
 ------------
```

5) Enter a title, move the cursor to 'POS' and press the Function Setup switch. The entered title appears on the screen. Select the position to display the title on the screen by using the Function Setup switch and press the Function Setup switch. When the position is determined, select 'END' and press the Function Setup switch to return to the SPECIAL menu.

Notes

- When the CAM TITLE menu is 'OFF', no title will be displayed on the monitor screen even if you enter one.
- Only English is available in this mode.
- If you move the cursor to CLR and press the Function Setup switch, all the letters are deleted. To edit a letter, change the cursor to the bottom left arrow and press the Function Setup switch. Move the cursor over the letter to be edited, move the cursor to the letter to be inserted and then press the Function Setup switch.

➲ SYNC : In areas where the supply is at 60Hz(NTSC), 50Hz(PAL), you can synchronize the output phase of multiple cameras using the power synchronization function (Line-Lock) without using a synchronization signal generator.

- INT : Internal Synchronization Type
- L/L : Power Synchronization Type, Line-lock

- Press the Function Setup switch.
- You can select a desired phase from 0 to 359 when select 'phase'.

Notes

- When using AC power at 60Hz(NTSC), 50Hz(PAL) frequency, you can use the L/L type synchronization.
- When the power is DC 12V, the SYNC menu is fixed to the 'INT' mode.
- When using RJ-45 Connector, you can't use the L/L type synchronization.

➲ MOTION DET :

This product has a feature that allows you to observe movement of objects in 8 different areas on the screen, and the words 'MOTION DETECTED' appear on the screen when movement is detected.

You can monitor activity more efficient.

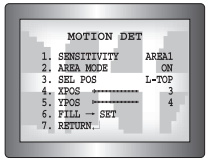

1) When the SPECIAL menu screen is displayed, press the Function Setup switch so that the arrow indicates 'MOTION DET'.

2) Set up the mode using the Function Setup switch.

- SENSITIVITY : You can select up to 8 MD areas. When SENSITIVITY number is high, motion detection sensitivity is increased to recognize even small movement.
- AREA MODE : Determines whether to use the MD area selected in SENSITIVITY.
- SEL POS : Determines which of the 4 vertices of each MD area is to be used.
- XPOS : Determines the coordinate of the horizontal axis for SEL POS.
- YPOS : Determines the coordinate of the vertical axis for SEL POS.
- FILL→SET : Fills in a selected MD area. The color of filling is sequentially selected as brown, orange, blue, cyan, green, yellow, magenta and red.
- RETURN : Select this to save the MOTION DET menu settings and return to the SPECIAL menu.

➲ PRIVACY : Mask an area you want to hide on the screen.

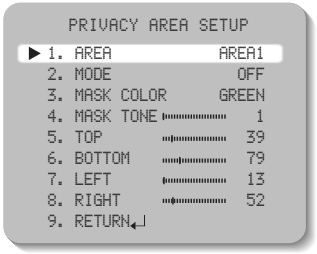

1) When the SPECIAL menu screen is displayed, press the Function Setup switch so that the arrow indicates 'PRIVACY'.
2) Set up the mode using the Function Setup switch.
   - AREA : You can select up to 12 PRIVACY areas.
   - MODE : Determines whether to use the area selected in the AREA.
   - MASK COLOR : Determine area color. You can select Green, Red, Blue, Black, White, Gray.
   - MASK TONE : Adjust the brightness of MASK COLOR.
   - TOP/BOTTOM/LEFT/RIGHT : Adjust the size and position of the selected area.
   - RETURN : Select this to save the PRIVACY menu settings and return to the SPECIAL menu.

➲ COMM ADJ (Communication Adjustment) :
This function sets up the camera communication status when controlling the camera through an external control device.
1) When the SPECIAL menu screen is displayed, press the Function Setup switch so that the arrow indicates 'COMM ADJ'.
2) Set up the mode using the Function Setup switch.

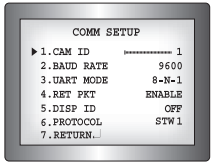

- CAM ID : Determines the camera's identification number (between 0 and 255).
- BAUD RATE : You can select 2400/4800/9600/19200/38400/57600 bps.
- UART MODE : You can select NONE, EVEN or ODD for the parity bits.
- RET PKT : Determines whether to send a command back to the controller device when a communication control command is sent to the camera.
- DISP ID : Display camera title on top left corner of the screen.
- PROTOCOL : Select the communication PROTOCOL. (SAMSUNG-T, SAMSUNG-E, PELCO-D, PELCO-P, BOSCH, HONEYWELL, VICON and PANASONIC)
- RETURN : Select this to save the PRIVACY menu settings and return to the SPECIAL menu.

* Initial value of communication adjustment

Item	Camera ID	BAUD RATE	UART MODE	PET PKT
Initial value	1	9600	8-NONE-1	ENABLE

Notes

- As below, the names of protocol have been changed.
  - STW(SPD) → SAMSUNG-T
  - SEC → SAMSUNG-E

➲ LANGUAGE : You can select the menu language according to your requirements.

➲ RETURN : Select this to save the SPECIAL menu settings and return to the MAIN SETUP menu.

EXIT

Select a desired EXIT mode using the Function Setup switch depending on the camera purpose.
- SAVE : Save the current settings and exit the MAIN SETUP menu.
- NOT SAVE : Do not save the current settings and exit the MAIN SETUP menu.
- RESET : Resets the camera settings to the factory defaults. Communication, Language and Monitor settings are not initialized.

Troubleshooting

If you have trouble operating your camera, refer to the following table.
If the guidelines do not enable you to solve the problem, contact an authorized technician.

- **Nothing appears on the screen.**
  - ▶ Check that the power cord and line connection between the camera and monitor are properly connected.
  - ▶ Check that you have properly connected UTP cable or BNC cable to the camera.
  - ▶ Check the pin arrangement for the UTP cable. (TIA/EIA-568B)
- **The image on the screen is dim.**
  - ▶ Is lens stained with dirt? Clean your lens with soft, clean cloth.
  - ▶ Set the monitor to the proper condition.
  - ▶ If the camera is exposed to very strong light, change the camera position.
- **The image on the screen is dark.**
  - ▶ Adjust the contrast feature of the monitor.
  - ▶ If you have an intermediate device, set the 75Ω / Hi-z properly.
- **The camera is not working properly, and the surface of the camera is hot.**
  - ▶ Check that you have properly connected the camera to an appropriate power source.
- **The SENS-UP function does not work.**
  - ▶ Check that AGC of EXPOSURE SETUP menu is 'OFF'.
  - ▶ Check that SHUTTER of EXPOSURE SETUP menu is 'A.FLK' or 'MANUAL'.
- **The Motion Detection function does not work.**
  - ▶ Check that MOTION DET of SPECIAL SETUP menu is 'OFF'.
- **Color is not correct.**
  - ▶ Check the setting of WHITE BAL SETUP menu.
- **The screen flickers continually.**
  - ▶ Ensure the camera is not pointing towards the sun.
- **When coaxial communication is not available.**
  - ▶ Make sure that the camera and monitor are installed within the recommended distance.
  - ▶ Use the video amplifier equivalent to coaxitron if the recommended installation distance is exceeded.
- **Picture is distorted.**
  - ▶ Check the length of the UTP cable (900m(3000ft) or less).
- **The camera does not work, and the video feed from the camera is not being received.**
  - ▶ Check the Power Supply to see whether the connection status and pin arrangement for the camera's UTP cable and the Camera Input UTP cable are normal.

Specifications

	SUD-2080FN	SUD-2080FP
ELECTRICAL		
Input Voltage	AC 24V ±10% / AC 28V ±10% / DC12V±10%	
Power Consumption	Max 3.5W	
VIDEO		
Imaging Device	1/3 inch, Diagonal 6mm Super HAD CCD	
Total / Effective Pixels	811(H) x 508(V) / 768(H) x 494(V)	795(H) x 596(V) / 752(H) x 582(V)
Scanning System	2:1 Interlace	
Synchronization	Internal / Line-Lock	
Frequency	H : 15.734KHz / V : 59.94Hz	H: 15.625KHz / V: 50.00Hz
Horizontal Resolution	COLOR : 600TVL, B/W : 700TVL	
Min. Illumination	COLOR : 0.15 Lux (50IRE, @F1.2), 0.0003Lux (SENS-UP, x512) B/W : 0.001Lux (50IRE, @F1.2), 0.000002Lux (SENS-UP, x512)	
S/N (Y Signal)	52dB (Weight ON, AGC OFF)	
Video Output	CVBS : 1.0Vp-p, 75Ω composite	
UTP	Built-in UTP TX (Maximum transmission length 900m(3000ft)) : Balanced differential signal 100Ω	
LENS		
Zoom Ratio / Focus Length	3.6x (Manual) / 2.8 ~ 10.0mm (F1.2)	
Angular Field of View	H : 94.4°(Wide) ~ 28°(Tele) / V : 69.2°(Wide) ~ 21°(Tele)	
Pan / Tilt / Rotate Range	0° ~ 340° / 0° ~ 146° / 0° ~ 340°	
OPERATIONAL		
Electronic Shutter Speed	1/60sec~1/120ksec	1/50sec ~ 1/120ksec
Shutter Mode	FIXED, ESC, MANUAL, A.FLK	
ON Screen Display	NTSC : English, Korean, Japanese, Spanish, French, Portuguese, Taiwanese PAL : English, Chinese, German, Italian, French, Spanish, Russian, Czech, Polish, Romanian, Serbian, Swedish, Danish, Turkish, Portuguese	
SSDR	ON / OFF (Level adjustable)	
Backlight Compensation	BLC / HLC / OFF	
Day & Night	COLOR / BW / AUTO (ICR)	
Gain Control	LOW / HIGH / OFF	
White Balance	ATW / Outdoor / Indoor / Manual / AWC (1,700°K ~ 11,000°K)	
SENS-UP (frame Integration)	AUTO / OFF (Selectable x2 ~ x512)	
Motion Detection	ON / OFF (8 Programmable zones)	
Privacy Masking	ON / OFF (12 Programmable zones)	
3D Noise Filter (SSNRIII)	ON / OFF (Level adjustable)	
Digital Zoom	ON / OFF (x1 ~ x16)	
Camera Title	ON / OFF (Display 15 Characters)	
Sharpness	ON / OFF (Level adjustable)	
Flip / Mirror	ON / OFF	
Coaxial Communication	Pelco Coaxitron	
RS-485 Communication	SAMSUNG-T, SAMSUNG-E, PELCO-D, PELCO-P, BOSCH, HONEYWELL, VICON, PANASONIC	
ENVIRONMENTAL		
Operating Temperature / Humidity	-10°C ~ +50°C / 30% ~ 80% RH	
MECHANICAL		
Dimension / Weight	Ø140 x 115 mm / 435g	

※ The specification for this product may change without prior notice for product improvement.
※ This specification is based on a transmission distance of 500 meters; in cases of long-distance transmissions, some degradation in picture quality may occur depending on the operating environment.

Dimension

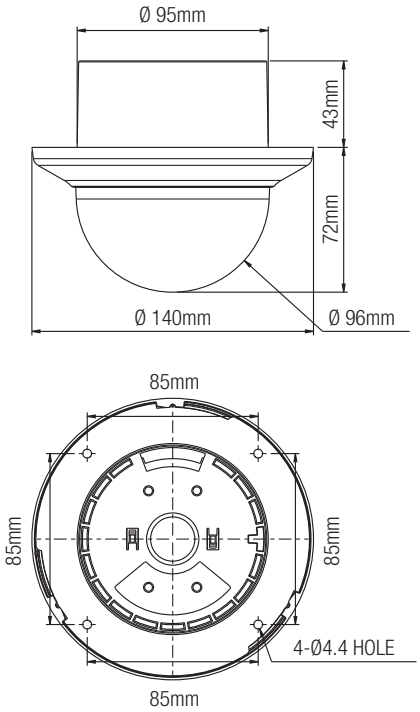

DECLARATION OF CONFORMITY

Application of Council Directive(s)	2004 / 108 / EC
Manufacturer's Name	SAMSUNG TECHWIN CO., LTD
Manufacturer's Address	SAMSUNG TECHWIN CO., LTD
	42, SUNGJU-DONG CHANGWON-CITY,
	KYUNGNAM, KOREA, 641-716
European Representative Name	
European Representative Address	
Equipment Type/Environment	CCTV Camera
Model Name	SUD-2080FP
Beginning Serial NO.	C55Z6V3Z200001X
Year of Manufacture	2010.02.01
Conformance to	EN 55022 : 2006
	EN 50130-4 : 2003

We, the undersigned, hereby declare that the equipment specified above conforms to the above Directive(s).

Manufacturer	SAMSUNG TECHWIN CO., LTD	Legal Representative in Europe
Signature	BJ Gu	Signature
Full Name	BONJENG GU	Full Name
Position	QUALITY CONTROL MANAGER	Position
Place	CHANGWON, KOREA	Place
Date	2010.02.01	Date

SAMSUNG TECHWIN

SALES NETWORK

• **SAMSUNG TECHWIN CO., LTD.**
145-3, Sangdaewon 1-dong, Jungwon-gu, Seongnam-si Gyeonggi-do, Korea, 462-703
TEL : +82-31-740-8151~8 FAX : +82-31-740-8145

• **SAMSUNG TECHWIN AMERICA Inc.**
1480 Charles Willard St, Carson, CA 90746, UNITED STATES
Tol Free : +1-877-213-1222 FAX : +1-310-632-2195
www.samsungcctvusa.com

• **SAMSUNG TECHWIN EUROPE LTD.**
Samsung House, 1000 Hillswood Drive, Hillswood Business
Park Chertsey, Surrey, UNITED KINGDOM KT16 OPS
TEL : +44-1932-45-5300 FAX : +44-1932-45-5325

www.samsungtechwin.com
www.samsungsecurity.com

P/No. : Z6806-1091-02A
VAN 10.02