

Network Thermal

# TNM-C2712TDR

## Early Fire Detection Bi-spectrum Thermal Camera

## Key Features

- QVGA Thermal Resolution
- 3MP Visible Resolution
- -10°C~450°C Temperature Detection
- Early Fire Detection Flame, Temperature

• Bi-spectrum Multi-Channel: QQVGA Thermal & 3MP Visible Sensor
• Max. Framerate: Visiable 30fps, Thermal 8fps
• Angular Field of View : Thermal H: 95° / V: 69° / D: 119°
& Visible H: 100° / V: 73° / D: 129°
• Early fire detection (Analytics events based on AI engine)
,Temperature difference detection
• IP66/IP67, IK09 (except lenses in front)
• PoE: Max 10.8W, typical 6.2W

Design and specifications are subject to change without notice. The latest product information / specification can be found at HanwhaVision.com
Hanwha Vision is formerly known as Hanwha Techwin.

© Hanwha Vision CO., LTD. All rights reserved.

# TNM-C2712TDR

Early Fire Detection Bi-spectrum Thermal Camera



## Specifications

| Video | | Ch 1 | Ch 2 |
|---|---|---|---|
| Imaging Device | Size | 1/2.8" | |
| | Type | CMOS | Uncooled micro bolometer (160x120) |
| Resolution | | 2048x1536, 1920x1080, 1280x960, 1280x720, 800x600, 800x448, 720x576, 720x480, 640x480, 640x360, 320x240 | 640x480, 320x240 |
| Max. Framerate | H.265/H.264 | 30fps/25fps(60Hz/50Hz) | 8fps |
| | MJPEG | 5fps | |
| Spectral Range | | | 8~14㎛ |
| NETD | | | ≤50mK |
| Pixel Size | | | 12㎛ |
| Min. Illumination (Lux) | Color(1/30sec, 30IRE) | 0.06 | |
| | BW(1/30sec, 30IRE) | 0.06 | |

| Lens | | | |
|---|---|---|---|
| Focal Length (mm) | | 3.06 | 1.2 |
| Max Aperture Ratio (F number) | Wide | F1.6 | F1.1 |
| Angular Field of View | Horizontal | 100 | 95 |
| | Vertical | 73 | 69 |
| | Diagonal | 129 | 119 |
| Min. Object Distance | | 1.1m(3.6ft) | 0.15m(0.49ft) |
| Focus Control | | Fixed | |

| Pan / Tilt / Rotate | | |
|---|---|---|
| Pan / Tilt / Rotate Range | Pan | 0°~360° |
| | Tilt | 0°~70° |
| | Rotate | 0°~360° |

| Operational | | |
|---|---|---|
| Day & Night | Auto(Electrical) | |
| Backlight Compensation | BLC, WDR, SSDR | |

Design and specifications are subject to change without notice. The latest product information / specification can be found at HanwhaVision.com
Hanwha Vision is formerly known as Hanwha Techwin.

© Hanwha Vision CO., LTD. All rights reserved.

## Operational

| | | | |
|---|---|---|---|
| **Wide Dynamic Range (dB)** | | 120 | |
| **Digital Noise Reduction** | | SSNR V | |
| **Motion Detection** | Quantity | 8ea | |
| | Shape | 8point Polygonal zones | |
| **Privacy Masking** | Quantity | 6ea | |
| | Shape | Rectangular zones | |
| | Color / Option | Gray, Black, White | |
| **Gain Control** | | Low, Middle, High | |
| **White Balance** | | ATW, AWC, Manual, Indoor, Outdoor | |
| **LDC** | | Support | |
| **Electronic Shutter** | Mode | Minimum, Maximum, Anti flicker | |
| | Speed Range | 1/5~1/12,000sec | |
| **Video Rotation** | | Flip, Mirror | |
| **Alarm Interface** | In/Out | Input 1ea, Output 1ea | |
| **Alarm Triggers** | | Analytics, Network disconnect, Alarm input, MQTT subscription | |
| **Alarm Events When Alarm Trigger Occurred** | | File upload(image): e-mail/FTP,<br>Notification: e-mail,<br>Recording: SD/SDHC/SDXC or NAS recording at event triggers,Alarm output,<br>Handover: PTZ preset,send message by HTTP/HTTPS/TCP,Audio clip playback,<br>MQTT: publication,Light alarm | |
| **Audio In** | | Selectable(mic in/line in) | |
| **Audio Out** | | Line out | |
| **Color Pallettes** | | | Whitehot, Sepia, Red, Custom |

## Radiometry

| | | | |
|---|---|---|---|
| **Temperature Detect Range** | | | -10°C~450°C |
| **Temperature Accuracy** | | | Greater of ±10°C or 10% |
| **Temperature Detection ROI Zones** | Quantity | | 2ea |
| | Shape / Option | | Rectangle |
| **Spot Temperature Reading** | | | Support |
| **ROI Condition Monitoring** | | | Above, Below, Increase, Decrease |

## Network

| | |
|---|---|
| **Ethernet** | Metal shielded RJ-45(10/100BASE-T) |
| **Video Compression** | H.265: Main,<br>H.264: Main/High,MJPEG |
| **Audio Compression** | G.711 u-law /G.726 selectable,G.726(ADPCM) 8kHz,G.711 8kHz,<br>G.726: 16kbps,24kbps,32kbps,40kbps,<br>AAC-LC: 48kbps at 16kHz |

Design and specifications are subject to change without notice. The latest product information / specification can be found at HanwhaVision.com
Hanwha Vision is formerly known as Hanwha Techwin.

© Hanwha Vision CO., LTD. All rights reserved.

## Network

| | | |
|---|---|---|
| **Smart Codec** | | WiseStream II |
| **Bitrate Control** | | H.265/H.264: CBR or VBR,<br>MJPEG: VBR |
| **Streaming** | Unicast | Up to 6 users |
| | Multicast | Support |
| | Multiple Streaming | Up to 3 profiles |
| **Protocol** | | IPv4, IPv6, TCP/IP, UDP/IP, RTP(UDP), RTP(TCP), RTCP, RTSP, NTP, HTTP, HTTPS, SSL/TLS, DHCP, FTP, SMTP, ICMP, IGMPv1/v2/v3, SNMPv1/v2c/v3(MIB-2), ARP, DNS, DDNS, QoS, UPnP, Bonjour, LLDP, CDP, SRTP(TCP, UDP Unicast), MQTT |
| **Application Programming Interface** | ONVIF | S, T, M |
| | Others | SUNAPI(HTTP API), Hanwha Vision Open Platform |

## Security

| | |
|---|---|
| **OS / Firmware Protect** | Encrypted firmware, Secure boot, Signed firmware |
| **User authentication** | Digest authentication, Prevent brute-force attack |
| **Network authentication** | IEEE 802.1X(EAP-TLS, EAP-LEAP, EAP-PEAP, MSCHAPv2) |
| **Secure Communication** | HTTPS, WSS(WebSocket Secure), SRTP |
| **Access Control** | IP-based access control |
| **Data Protect** | Encryption credentials |
| **Audit** | Access / System / Event Log management |
| **Device ID** | Device certificate(Hanwha Vision Root CA) |
| **Secure Storage** | SDcard partition encrypt(AES-256) |

## General

| | | |
|---|---|---|
| **Memory** | RAM | 2GB |
| | Flash | 512MB |
| **Edge Storage** | Micro SD/SDHC/SDXC | Max. 512GB x 1slot |

## Environmental & Electrical

| | | |
|---|---|---|
| **Operating Condition** | Temperature | -30°C~+55°C(-22°F~+131°F) |
| | Humidity | 0~95% RH(non-condensing) |
| | Others | Start up should be done at above -10°C |
| **Storage Condition** | Temperature | -40°C~+60°C(-40°F~+140°F) |
| | Humidity | 0~95% RH(non-condensing) |
| **Input Voltage** | | PoE(IEEE802.3af, Class3) |
| **Power Consumption** | PoE | Max 10.8W, typical 6.2W |

## Mechanical

| | |
|---|---|
| **Color** | White |
| **Material** | Aluminum |

Design and specifications are subject to change without notice. The latest product information / specification can be found at HanwhaVision.com
Hanwha Vision is formerly known as Hanwha Techwin.

© Hanwha Vision CO., LTD. All rights reserved.

## Mechanical

| | |
|---|---|
| RAL Code | RAL9003 |
| Product Dimensions | Ø110x97mm(ø4.33x3.82") |
| Product Weight | 650g(1.43lb) |
| Compatible Gang Box | Single |

## Certifications & Standards

| | |
|---|---|
| EMC | FCC 47 CFR 15 Subpart B Class A, ICES-3(A)/NMB-3(A), CE/UKCA - EN55032 Class A, EN 50130-4, EN 61000-3-2, EN 61000-3-3, VCCI CISPR 32 Class A, RCM AS-NZS CISPR 32 Class A, KS C 9832 Class A, KS C 9835 |
| Safety | UL 62368-1, CAN/CSA C22.2 NO. 62368-1, IEC 62471 |
| Environment | IEC/EN 63000, IEC 60529 IP66, IEC 60529 IP67, IEC 62262 IK09 |

## DORI (EN62676-4 standard)

| | | | |
|---|---|---|---|
| Detect (25PPM/ 8PPF) | Wide | 34.4m(112.8ft) | |
| Observe (63PPM/ 19PPF) | Wide | 13.7m(44.9ft) | |
| Recognize (125PPM/ 38PPF) | Wide | 6.9m(22.6ft) | |
| Identify (250PPM/ 76PPF) | Wide | 3.4m(11.1ft) | |

## Thermal Detection Range

| | | |
|---|---|---|
| Temperature Detection | | 7m(22.96ft) |
| Early Fire Detection | | 7m(22.96ft) |

Design and specifications are subject to change without notice. The latest product information / specification can be found at HanwhaVision.com
Hanwha Vision is formerly known as Hanwha Techwin.

© Hanwha Vision CO., LTD. All rights reserved.

# TNM-C2712TDR

Early Fire Detection Bi-spectrum Thermal Camera



## CAD

**Unit:** mm [inch]

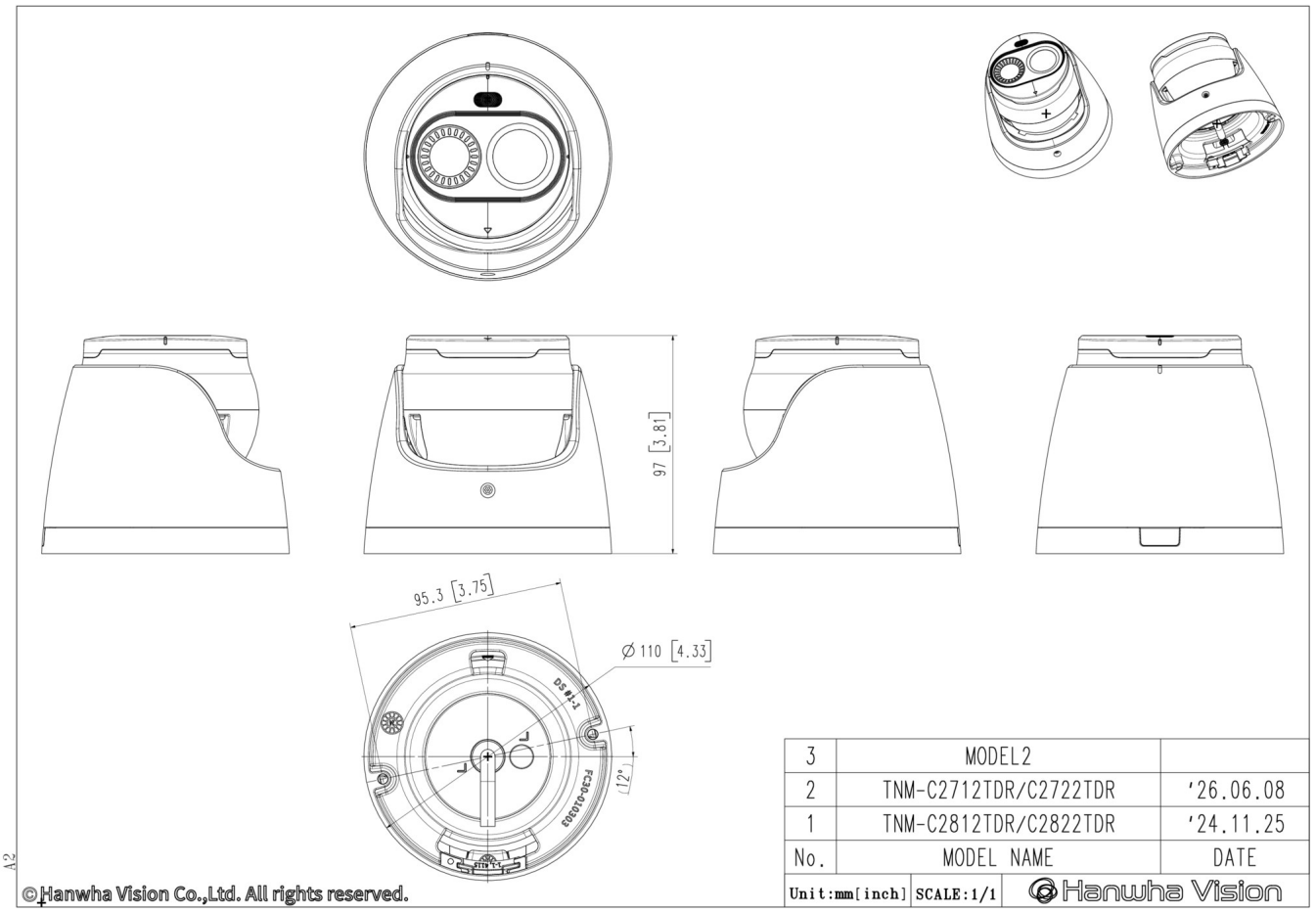


Design and specifications are subject to change without notice. The latest product information / specification can be found at HanwhaVision.com
Hanwha Vision is formerly known as Hanwha Techwin.

© Hanwha Vision CO., LTD. All rights reserved.