

Network Thermal

TNM-C2712TDR

Early Fire Detection Bi-spectrum Thermal Camera

Key Features

- QVGA Thermal Resolution
- 3MP Visible Resolution
- -10°C~450°C Temperature Detection
- Early Fire Detection Flame, Temperature

• Bi-spectrum Multi-Channel: QQVGA Thermal & 3MP Visible Sensor
• Max. Framerate: Visiable 30fps, Thermal 8fps
• Angular Field of View : Thermal H: 95° / V: 69° / D: 119°
& Visible H: 100° / V: 73° / D: 129°
• Early fire detection (Analytics events based on AI engine)
,Temperature difference detection
• IP66/IP67, IK09 (except lenses in front)
• PoE: Max 10.8W, typical 6.2W

Design and specifications are subject to change without notice. The latest product information / specification can be found at HanwhaVision.com
Hanwha Vision is formerly known as Hanwha Techwin.

© Hanwha Vision CO., LTD. All rights reserved.

TNM-C2712TDR

Early Fire Detection Bi-spectrum Thermal Camera



Specifications

映像		Ch 1	Ch 2
Imaging Device	サイズ	1/2.8"	
	タイプ	CMOS	Uncooled micro bolometer (160x120)
解像度		2048x1536, 1920x1080, 1280x960, 1280x720, 800x600, 800x448, 720x576, 720x480, 640x480, 640x360, 320x240	640x480, 320x240
Max. Framerate	H.265/H.264	30fps/25fps(60Hz/50Hz)	8fps
	MJPEG	5fps	
Spectral Range			8~14㎛
NETD			≤50mK
Pixel Size			12㎛
Min. Illumination (Lux)	Color(1/30sec, 30IRE)	0.06	
	BW(1/30sec, 30IRE)	0.06	

レンズ			
Focal Length (mm)		3.06	1.2
Max Aperture Ratio (F number)	Wide	F1.6	F1.1
視野角度	Horizontal	100	95
	Vertical	73	69
	Diagonal	129	119
Min. Object Distance		1.1m(3.6ft)	0.15m(0.49ft)
Focus Control		Fixed	

Pan / Tilt / Rotate		
Pan / Tilt / Rotate Range	Pan	0°~360°
	Tilt	0°~70°
	回転	0°~360°

技能		
Day & Night	Auto(Electrical)	
Backlight Compensation	BLC, WDR, SSDR	

Design and specifications are subject to change without notice. The latest product information / specification can be found at HanwhaVision.com
Hanwha Vision is formerly known as Hanwha Techwin.

© Hanwha Vision CO., LTD. All rights reserved.

技能

Wide Dynamic Range (dB)		120	
Digital Noise Reduction		SSNR V	
モーション検知	Quantity	8ea	
	Shape	8point Polygonal zones	
Privacy Masking	Quantity	6ea	
	Shape	Rectangular zones	
	Color / Option	灰色, 黒, 白	
ゲイン制御		低, 中, 高	
ホワイトバランス		ATW, AWC, 手動, 室内, 屋外	
LDC		サポート	
Electronic Shutter	モード	最小, 最大, アンチフリッカー	
	Speed Range	1/5~1/12,000sec	
ビデオ回転		FLIPモード, ミラー	
Alarm Interface	In/Out	Input 1ea, Output 1ea	
Alarm Triggers		分析, ネットワーク切断, アラーム入力, MQTT購読	
Alarm Events When Alarm Trigger Occurred		File upload(image): e-mail/FTP, Notification: e-mail, Recording: SD/SDHC/SDXC or NAS recording at event triggers,アラーム出力, Handover: PTZ preset,send message by HTTP/HTTPS/TCP,Audio clip playback, MQTT: publication,ライトアラーム	
オーディオ入力		Selectable(mic in/line in)	
オーディオ出力		Line out	
Color Pallettes			Whitehot, Sepia, Red, Custom

Radiometry

Temperature Detect Range			Narrow: -10°C~140°C, Wide: -10°C~450°C
Temperature Accuracy			Narrow: Greater of ±5°C or 5%, Wide: Greater of ±10°C or 10%
Temperature Detection ROI Zones	Quantity		2ea
	Shape / Option		四角
Spot Temperature Reading			サポート
ROI Condition Monitoring			以上, 以下, 増加, 減少

ネットワーク

Ethernet	Metal shielded RJ-45(10/100BASE-T)
映像圧縮	H.265/H.264: Main/High, MJPEG

Design and specifications are subject to change without notice. The latest product information / specification can be found at HanwhaVision.com
Hanwha Vision is formerly known as Hanwha Techwin.

© Hanwha Vision CO., LTD. All rights reserved.

ネットワーク

Audio Compression		G.711 u-law /G.726 selectable,G.726(ADPCM) 8kHz,G.711 8kHz, G.726: 16kbps,24kbps,32kbps,40kbps, AAC-LC: 48kbps at 16kHz
Smart codec		WiseStream II
ビットレートコントロール		H.265/H.264: CBR or VBR, MJPEG: VBR
Streaming	Unicast	最大 6ユーザー
	マルチキャスト	サポート
	Multiple Streaming	最大 3プロファイル
プロトコル		IPv4, IPv6, TCP/IP, UDP/IP, RTP(UDP), RTP(TCP), RTCP, RTSP, NTP, HTTP, HTTPS, SSL/TLS, DHCP, FTP, SMTP, ICMP, IGMP, SNMPv1/v2c/v3(MIB-2), ARP, DNS, DDNS, QoS, UPnP, Bonjour, LLDP, CDP, SRTP(TCP, UDP Unicast), MQTT
Application Programming Interface	ONVIF	s, T, M
	その他	SUNAPI(HTTP API), Hanwha Vision Open Platform

セキュリティ

OS / Firmware Protect	Encrypted firmware, Secure boot, Signed firmware
ユーザー認証	ダイジェスト認証, Prevent brute-force attack
Network authentication	IEEE 802.1X(EAP-TLS, EAP-LEAP, EAP-PEAP, MSCHAPv2)
Secure Communication	HTTPS, WSS(WebSocket Secure), SRTP
Access Control	IP-based access control
Data Protect	Encryption credentials
Audit	Access / System / Event Log management
デバイスID	Device certificate(Hanwha Vision Root CA)
Secure Storage	SDcard partition encrypt(AES-256)

一般

メモリ	RAM	2GB
	フラッシュ	512MB
Edge Storage	Micro SD/SDHC/SDXC	Max. 512GB x 1slot

Environmental & Electrical

動作条件	温度	-30°C~+55°C(-22°F~+131°F)
	湿度	0~95% RH(non-condensing)
	その他	Start up should be done at above -10°C
保管条件	温度	-40°C~+60°C(-40°F~+140°F)
	湿度	0~95% RH(non-condensing)
Input Voltage		PoE(IEEE802.3af, Class3)
消費電力	PoE	Max 10.8W, typical 6.2W

Design and specifications are subject to change without notice. The latest product information / specification can be found at HanwhaVision.com
Hanwha Vision is formerly known as Hanwha Techwin.

© Hanwha Vision CO., LTD. All rights reserved.

Mechanical

カラー	白
材料	アルミニウム
RAL Code	RAL9003
Product Dimensions	Ø110x97mm(ø4.33x3.82")
Product Weight	650g(1.43lb)
Compatible Gang Box	シングル

Certifications & Standards

EMC	FCC 47 CFR 15 Subpart B Class A, ICES-3(A)/NMB-3(A), CE/UKCA - EN55032 Class A, EN 50130-4, EN 61000-3-2, EN 61000-3-3, VCCI CISPR 32 Class A, RCM AS-NZS CISPR 32 Class A, KS C 9832 Class A, KS C 9835
Safety	UL 62368-1, CAN/CSA C22.2 NO. 62368-1, IEC 62471
環境	IEC/EN 63000, IEC 60529 IP66, IEC 60529 IP67, IEC 62262 IK09

DORI (EN62676-4 standard)

Detect (25PPM/ 8PPF)	Wide	34.4m(112.8ft)	
Observe (63PPM/ 19PPF)	Wide	13.7m(44.9ft)	
Recognize (125PPM/ 38PPF)	Wide	6.9m(22.6ft)	
Identify (250PPM/ 76PPF)	Wide	3.4m(11.1ft)	

Thermal Detection Range

温度検知		7m(22.96ft)
火災早期検知		7m(22.96ft)

Design and specifications are subject to change without notice. The latest product information / specification can be found at HanwhaVision.com
Hanwha Vision is formerly known as Hanwha Techwin.

© Hanwha Vision CO., LTD. All rights reserved.

TNM-C2712TDR

Early Fire Detection Bi-spectrum Thermal Camera



CAD

Unit: mm [inch]

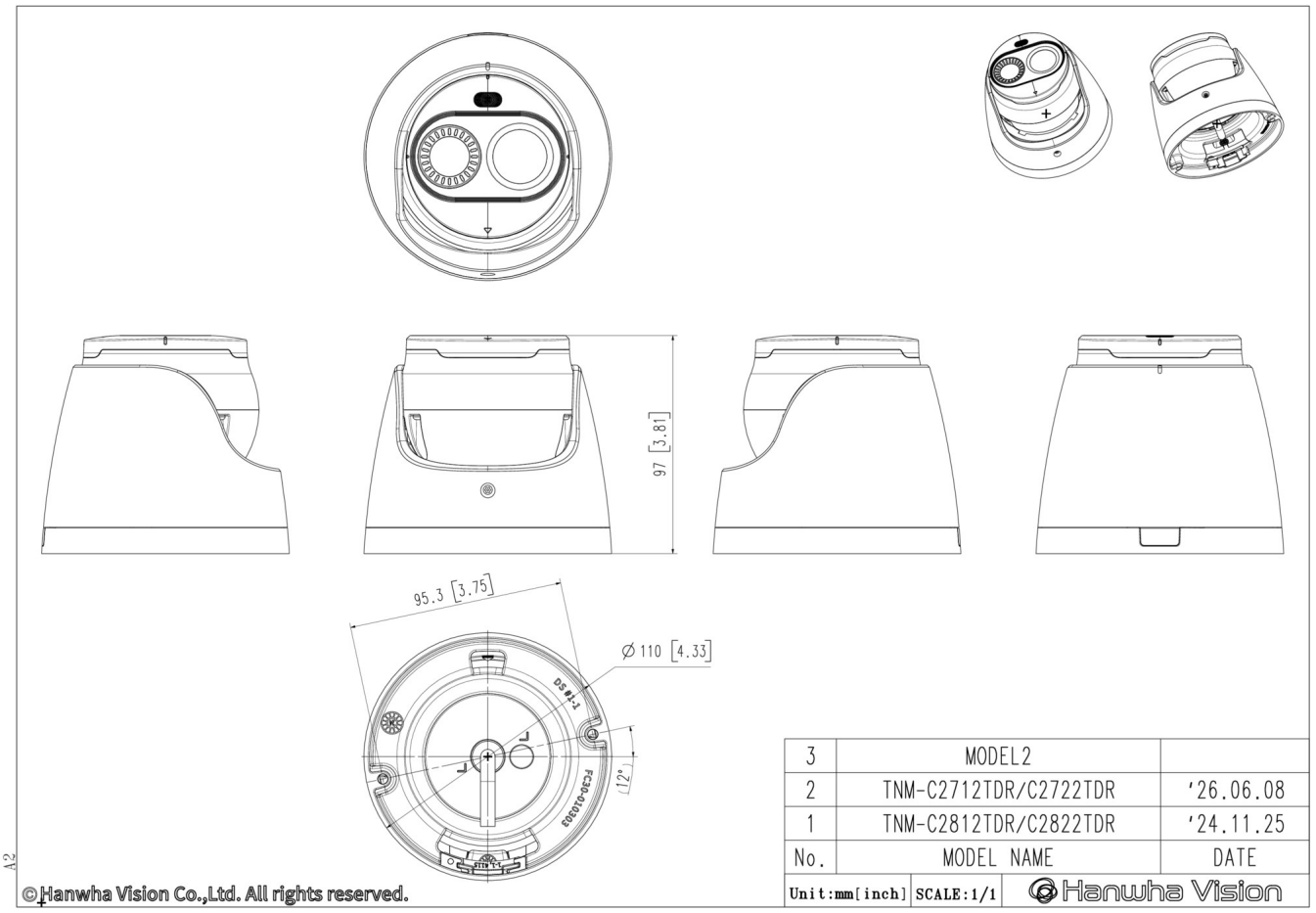

Design and specifications are subject to change without notice. The latest product information / specification can be found at HanwhaVision.com
Hanwha Vision is formerly known as Hanwha Techwin.

© Hanwha Vision CO., LTD. All rights reserved.