

Network Thermal

TNM-C2712TDR

Bi-spectrum Early Fire Detection Camera

Key Features

- QVGA Thermal Resolution
- 3MP Visible Resolution
- -10°C~450°C Temperature Detection
- Early Fire Detection Flame, Temperature
- Thermal:
  - Resolution: 160 x 120 (uncooled) @ 8fps
  - NETD: <50mK
  - Built-in 1.2mm fixed lens (95° HFoV / 69° VFoV)

Design and specifications are subject to change without notice. The latest product information / specification can be found at HanwhaVision.com
Hanwha Vision is formerly known as Hanwha Techwin.

© Hanwha Vision CO., LTD. All rights reserved.

TNM-C2712TDR

Bi-spectrum Early Fire Detection Camera



Specifications

Video		Ch 1	Ch 2
Imaging Device	Size	1/2.8"	
	Type	CMOS	Uncooled micro bolometer (160x120)
Resolution		2048x1536, 1920x1080, 1280x960, 1280x720, 800x600, 800x448, 720x576, 720x480, 640x480, 640x360, 320x240	640x480, 320x240
Max. Framerate	H.265/H.264	30fps/25fps(60Hz/50Hz)	8fps
	MJPEG	5fps	
Spectral Range			8~14㎛
NETD			≤50mK
Pixel Size			12㎛
Min. Illumination (Lux)	Color(1/30sec, 30IRE)	0.06	
	BW(1/30sec, 30IRE)	0.06	

Lens			
Focal Length (mm)		3.06	1.2
Max Aperture Ratio (F number)	Wide	F1.6	F1.1
Angular Field of View	Horizontal	100	95
	Vertical	73	69
	Diagonal	129	119
Min. Object Distance		1.1m(3.6ft)	0.15m(0.49ft)
Focus Control		Fixed	

Pan / Tilt / Rotate		
Pan / Tilt / Rotate Range	Pan	0°~360°
	Tilt	0°~70°
	Rotate	0°~360°

Operational		
Day & Night	Auto(Electrical)	
Backlight Compensation	BLC, WDR, SSDR	

Design and specifications are subject to change without notice. The latest product information / specification can be found at HanwhaVision.com
Hanwha Vision is formerly known as Hanwha Techwin.

© Hanwha Vision CO., LTD. All rights reserved.

Operational

Wide Dynamic Range (dB)		120	
Digital Noise Reduction		SSNR V	
Motion Detection	Quantity	8ea	
	Shape	8point Polygonal zones	
Privacy Masking	Quantity	6ea	
	Shape	Rectangular zones	
	Color / Option	Gray, Black, White	
Gain Control		Low, Middle, High	
White Balance		ATW, AWC, Manual, Indoor, Outdoor	
LDC		Support	
Electronic Shutter	Mode	Minimum, Maximum, Anti flicker	
	Speed Range	1/5~1/12,000sec	
Video Rotation		Flip, Mirror	
Alarm Interface	In/Out	Input 1ea, Output 1ea	
Alarm Triggers		Analytics, Network disconnect, Alarm input, MQTT subscription	
Alarm Events When Alarm Trigger Occurred		File upload(image): e-mail/FTP, Notification: e-mail, Recording: SD/SDHC/SDXC or NAS recording at event triggers,Alarm output, Handover: PTZ preset,send message by HTTP/HTTPS/TCP,Audio clip playback, MQTT: publication,Light alarm	
Audio In		Selectable(mic in/line in)	
Audio Out		Line out	
Color Pallettes			Whitehot, Sepia, Red, Custom

Radiometry

Temperature Detect Range			-10°C~450°C
Temperature Accuracy			Greater of ±10°C or 10%
Temperature Detection ROI Zones	Quantity		2ea
	Shape / Option		Rectangle
Spot Temperature Reading			Support
ROI Condition Monitoring			Above, Below, Increase, Decrease

Network

Ethernet	Metal shielded RJ-45(10/100BASE-T)
Video Compression	H.265: Main, H.264: Main/High,MJPEG
Audio Compression	G.711 u-law /G.726 selectable,G.726(ADPCM) 8kHz,G.711 8kHz, G.726: 16kbps,24kbps,32kbps,40kbps, AAC-LC: 48kbps at 16kHz

Design and specifications are subject to change without notice. The latest product information / specification can be found at HanwhaVision.com
Hanwha Vision is formerly known as Hanwha Techwin.

© Hanwha Vision CO., LTD. All rights reserved.

Network

Smart Codec		WiseStream II
Bitrate Control		H.265/H.264: CBR or VBR, MJPEG: VBR
Streaming	Unicast	Up to 6 users
	Multicast	Support
	Multiple Streaming	Up to 3 profiles
Protocol		IPv4, IPv6, TCP/IP, UDP/IP, RTP(UDP), RTP(TCP), RTCP, RTSP, NTP, HTTP, HTTPS, SSL/TLS, DHCP, FTP, SMTP, ICMP, IGMPv1/v2/v3, SNMPv1/v2c/v3(MIB-2), ARP, DNS, DDNS, QoS, UPnP, Bonjour, LLDP, CDP, SRTP(TCP, UDP Unicast), MQTT
Application Programming Interface	ONVIF	S, T, M
	Others	SUNAPI(HTTP API), Hanwha Vision Open Platform

Security

OS / Firmware Protect	Encrypted firmware, Secure boot, Signed firmware
User authentication	Digest authentication, Prevent brute-force attack
Network authentication	IEEE 802.1X(EAP-TLS, EAP-LEAP, EAP-PEAP, MSCHAPv2)
Secure Communication	HTTPS, WSS(WebSocket Secure), SRTP
Access Control	IP-based access control
Data Protect	Encryption credentials
Audit	Access / System / Event Log management
Device ID	Device certificate(Hanwha Vision Root CA)
Secure Storage	SDcard partition encrypt(AES-256)

General

Memory	RAM	2GB
	Flash	512MB
Edge Storage	Micro SD/SDHC/SDXC	Max. 512GB x 1slot

Environmental & Electrical

Operating Condition	Temperature	-30°C~+55°C(-22°F~+131°F)
	Humidity	0~95% RH(non-condensing)
	Others	Start up should be done at above -10°C
Storage Condition	Temperature	-40°C~+60°C(-40°F~+140°F)
	Humidity	0~95% RH(non-condensing)
Input Voltage		PoE(IEEE802.3af, Class3)
Power Consumption	PoE	Max 10.8W, typical 6.2W

Mechanical

Color	White
Material	Aluminum

Design and specifications are subject to change without notice. The latest product information / specification can be found at HanwhaVision.com
Hanwha Vision is formerly known as Hanwha Techwin.

© Hanwha Vision CO., LTD. All rights reserved.

Mechanical

RAL Code	RAL9003
Product Dimensions	Ø110x97mm(ø4.33x3.82")
Product Weight	650g(1.43lb)
Compatible Gang Box	Single

Certifications & Standards

EMC	FCC 47 CFR 15 Subpart B Class A, ICES-3(A)/NMB-3(A), CE/UKCA - EN55032 Class A, EN 50130-4, EN 61000-3-2, EN 61000-3-3, VCCI CISPR 32 Class A, RCM AS-NZS CISPR 32 Class A, KS C 9832 Class A, KS C 9835
Safety	UL 62368-1, CAN/CSA C22.2 NO. 62368-1, IEC 62471
Environment	IEC/EN 63000, IEC 60529 IP66, IEC 60529 IP67, IEC 62262 IK09

DORI (EN62676-4 standard)

Detect (25PPM/ 8PPF)	Wide	34.4m(112.8ft)	
Observe (63PPM/ 19PPF)	Wide	13.7m(44.9ft)	
Recognize (125PPM/ 38PPF)	Wide	6.9m(22.6ft)	
Identify (250PPM/ 76PPF)	Wide	3.4m(11.1ft)	

Thermal Detection Range

Temperature Detection		7m(22.96ft)
Early Fire Detection		7m(22.96ft)

Design and specifications are subject to change without notice. The latest product information / specification can be found at HanwhaVision.com
Hanwha Vision is formerly known as Hanwha Techwin.

© Hanwha Vision CO., LTD. All rights reserved.

TNM-C2712TDR

Bi-spectrum Early Fire Detection Camera



CAD

Unit: mm [inch]

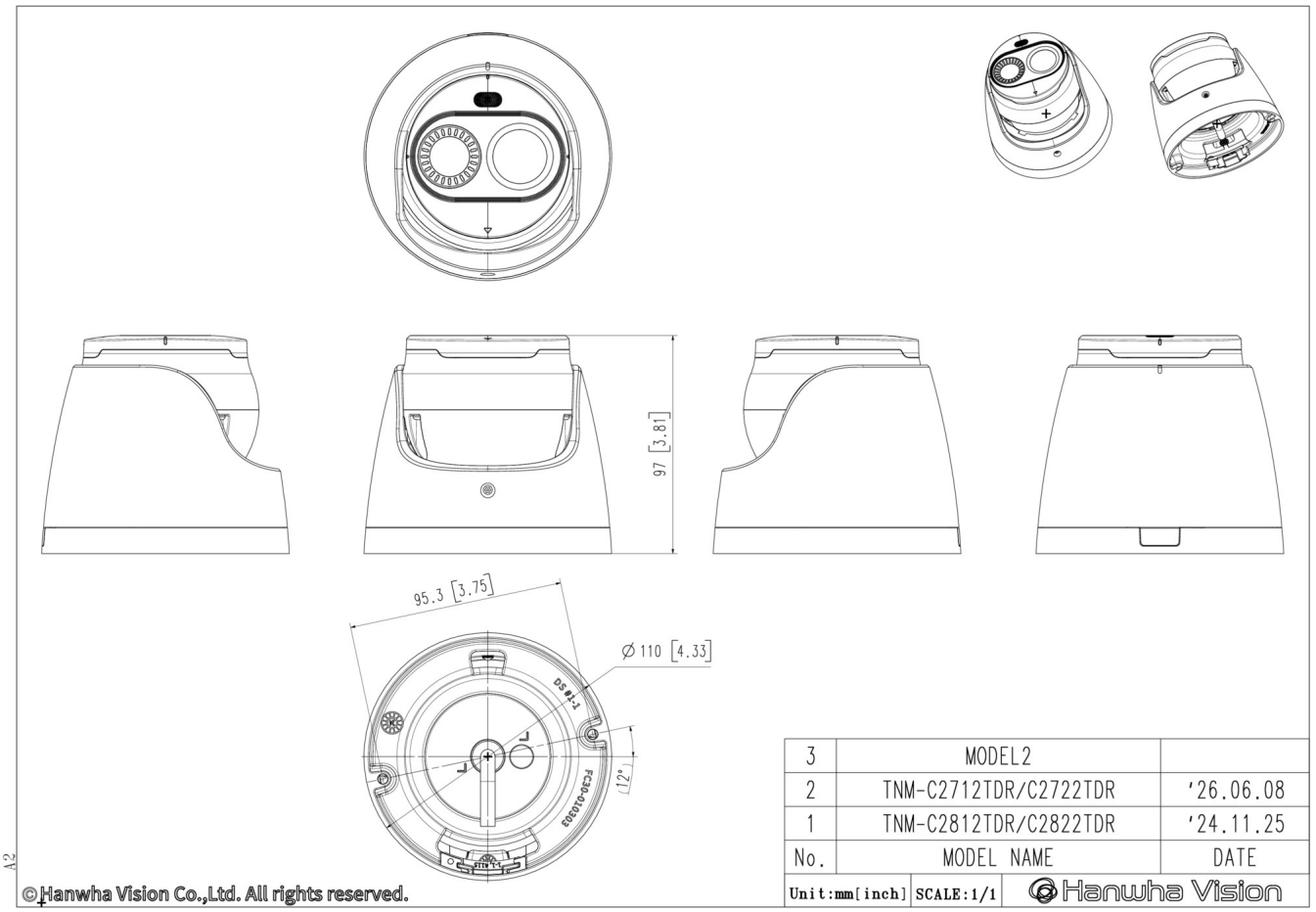

Design and specifications are subject to change without notice. The latest product information / specification can be found at HanwhaVision.com
Hanwha Vision is formerly known as Hanwha Techwin.

© Hanwha Vision CO., LTD. All rights reserved.