

Network Thermal

TNO-3030T

QVGA сетевая тепловизионная камера

Key Features

- Поддержка макс. разрешения 320 x 240
- Встроенный объектив 13,7 мм с постоянным фокусом
- Поддержка кодеков H.265, H.264, MJPEG
- До 30 кад/с при любом разрешении (H.265/ H.264/ MJPEG)
- Обнаружение движения, передача данных на PTZ камеру, обнаружение внешнего воздействия, праздношатания
- Обнаружение направления движения, движения, появления/исчезновения объектов, входа/выхода, праздношатания, внешнего воздействия, пересечения виртуальной границы, аудио, распознавание звуков по типам, определение температуры, обнаружение ударов
- Слот для карт памяти micro SD/SDHC/SDXC (макс. 256 Гб)
- Функция обзора коридоров, поддержка WiseStream II
- Технология PoE, 24 В перем. тока, 12 В пост. тока / IP66, NEMA4X, IK10

Design and specifications are subject to change without notice. The latest product information / specification can be found at HanwhaVision.com
Hanwha Vision is formerly known as Hanwha Techwin.

© Hanwha Vision CO., LTD. All rights reserved.

TNO-3030T

QVGA сетевая тепловизионная камера



Specifications

Video

Imaging Device	Type	Uncooled micro bolometer (320x240)
Resolution		320x240
Max. Framerate	H.265/H.264	30fps/25fps(60Hz/50Hz)
	MJPEG	30fps
Spectral Range		8~14㎛
NETD		≤60mK
Pixel Size		12㎛
Video Out		CVBS: 1.0 Vp-p / 75Ω composite for installation, USB: Micro USB Type B. Preview and installation ONLY. Requires WiFi dongle.

Lens

Focal Length (mm)		13.7
Max Aperture Ratio (F number)	Wide	1.0
Angular Field of View	Horizontal	16°
	Vertical	12°
	Diagonal	20°
iFoV		0.87mRad
Min. Object Distance		8m(26.25ft)
Focus Control		Fixed

Operational

Digital Image Stabilization		Support(built-in gyro sensor)
Motion Detection	Quantity	8ea
	Shape	8point Polygonal zones
Privacy Masking	Quantity	32ea
	Shape	Polygonal zones
	Color / Option	Gray, Green, Red, Blue, Black, White, Mosaic
Video Rotation		Flip, Mirror, Hallway view(90°/270°)
Alarm Interface	In/Out	Input 1ea, Output 2ea

Design and specifications are subject to change without notice. The latest product information / specification can be found at HanwhaVision.com
Hanwha Vision is formerly known as Hanwha Techwin.

© Hanwha Vision CO., LTD. All rights reserved.

Operational

Alarm Triggers		Analytics, Network disconnect, Alarm input
Alarm Events When Alarm Trigger Occurred		File upload(image): e-mail/FTP, Notification: e-mail, Recording: SD/SDHC/SDXC or NAS recording at event triggers,Alarm output, Handover: PTZ preset
Audio In		Selectable(mic in/line in)
Audio Out		Line out
Color Pallettes		Whitehot, Blackhot, Rainbow, Rainbow2, Sepia, Red, Iron, Custom

Analytics

Analytics Events	Normal	Motion detection, Tampering, Sound classification, Shock detection, Virtual area(Lotering, Intrusion, Enter/Exit, Appear/Disappear), Virtual line(Crossing, Direction) , Temperature detection

Network

Ethernet		RJ-45(10/100BASE-T)
Video Compression		H.265: Main, H.264: Main/Baseline/High,MJPEG
Audio Compression		G.711 u-law /G.726 selectable,G.726(ADPCM) 8kHz,G.711 8kHz, G.726: 16kbps,24kbps,32kbps,40kbps, AAC-LC: 48kbps at 16kHz
Smart Codec		Manual, WiseStream II
Bitrate Control		H.265/H.264: CBR or VBR, MJPEG: VBR
Streaming	Unicast	Up to 20 users
	Multicast	Support
	Multiple Streaming	Up to 10 profiles
Protocol		IPv4, IPv6, TCP/IP, UDP/IP, RTP(UDP), RTP(TCP), RTCP, RTSP, NTP, HTTP, HTTPS, SSL/TLS, DHCP, FTP, SMTP, ICMP, IGMPv2, SNMPv1/v2c/v3(MIB-2), ARP, DNS, DDNS, QoS, UPnP, Bonjour, LLDP, SRTP(TCP, UDP Unicast)
Application Programming Interface	ONVIF	S, G, T
	Others	SUNAPI(HTTP API), Hanwha Vision Open Platform

Security

OS / Firmware Protect		Encrypted firmware
User authentication		Digest authentication
Network authentication		IEEE 802.1X(EAP-TLS, EAP-LEAP)
Secure Communication		HTTPS, WSS(WebSocket Secure), SRTP
Access Control		IP-based access control
Data Protect		Encryption credentials
Audit		Access / System / Event Log management
Device ID		Device certificate(Hanwha Vision Root CA)

Design and specifications are subject to change without notice. The latest product information / specification can be found at HanwhaVision.com
Hanwha Vision is formerly known as Hanwha Techwin.

© Hanwha Vision CO., LTD. All rights reserved.

General

Memory	RAM	1GB
	Flash	256MB
Edge Storage	Micro SD/SDHC/SDXC	Max. 256GB x 1slot

Environmental & Electrical

Operating Condition	Temperature	-40°C~+60°C(-40°F~+140°F)
	Humidity	0~90% RH(non-condensing)
Storage Condition	Temperature	-50°C~+60°C(-58°F~+140°F)
	Humidity	0~90% RH(non-condensing)
Input Voltage		PoE(IEEE802.3af, Class3), 12VDC, 24VAC
Power Consumption	PoE	Max. 8.7W, typical 7.5W
	12VDC	Max. 7.8W, typical 6.7W
	24VAC	Max. 9.2W, typical 8.0W

Mechanical

Color	White
Material	Aluminum
RAL Code	RAL9003
Product Dimensions	ø147.51x375.3mm(5.81x14.78")
Product Weight	2512g(5.538lb)

Certifications & Standards

Environment	IEC 60529 IP66, IEC 62262 IK10, NEMA 250 type 4X

Design and specifications are subject to change without notice. The latest product information / specification can be found at HanwhaVision.com
Hanwha Vision is formerly known as Hanwha Techwin.

© Hanwha Vision CO., LTD. All rights reserved.

TNO-3030T

QVGA сетевая тепловизионная камера



CAD

Unit: mm [inch]

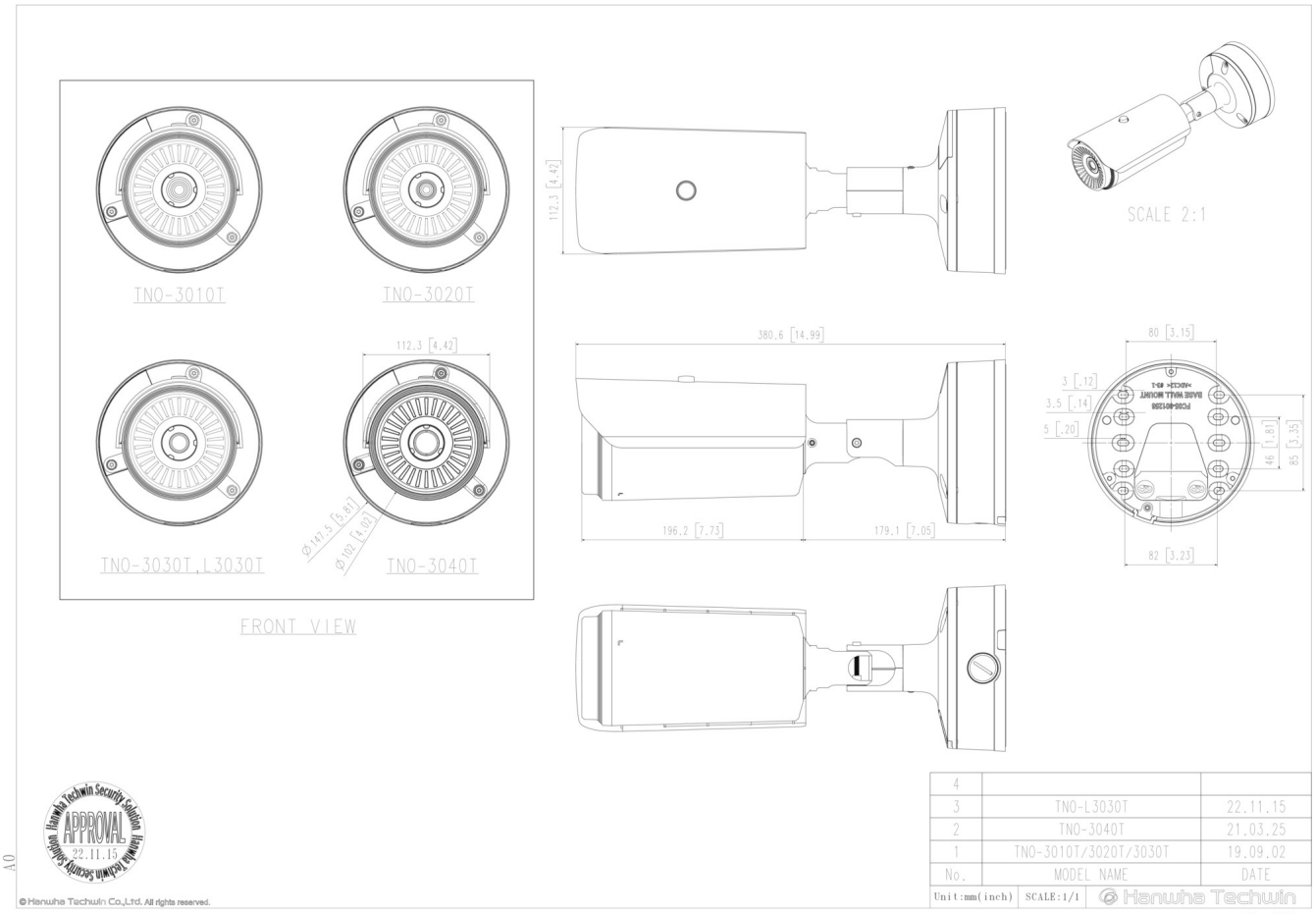

© Hanwha Vision CO., LTD. All rights reserved.

Compatible Devices

SBP-303PM

Design and specifications are subject to change without notice. The latest product information / specification can be found at HanwhaVision.com
Hanwha Vision is formerly known as Hanwha Techwin.

© Hanwha Vision CO., LTD. All rights reserved.