

Network

TNO-6321E

2MP Explosion-proof Camera

Key Features

- Max. 2MP (1920 x 1080) resolution
- H: 61.8(Wide)~2.19(Tele) / V: 36.2(Wide)~1.24(Tele) field of view
- Colour: 0.05Lux (1/30sec, F1.6), B/W: 0.005 Lux (1/30sec, F1.6)
- H.264, H.265, MJPEG codec, WiseStream II
- Day & Night (ICR), WDR (120dB)
- Face detection, Tampering, Virtual line support
- Explosion-proof certificate : CE2460, EX II 2 GD, Ex d IIC T6 Gb
- IP67 Ex tb IIIC T80°C Db
- Stainless 316L, Built-in Wiper
- IP67, IK10

Design and specifications are subject to change without notice. The latest product information / specification can be found at HanwhaVision.com
Hanwha Vision is formerly known as Hanwha Techwin.

© Hanwha Vision CO., LTD. All rights reserved.

TNO-6321E

2MP Explosion-proof Camera



Specifications

Vídeo

Dispositivo de imagen	Tamaño	1/2.8"
	Tipo	CMOS
Resolución		1920x1080, 1280x1024, 1280x960, 1280x720, 1024x768, 800x600, 800x448, 720x576, 720x480, 640x480, 640x360, 320x240
Máx. Frecuencia de cuadro	H.265 / H.264	60fps/50fps(60Hz/50Hz)
	MJPEG	30fps
Mín. Iluminación (Lux)	Color (1/30 seg., 30 IRE)	0.05
	B/N (1/30 seg., 30 IRE)	0.005

Objetivo

Longitud focal (mm)		4.44~142.6
Proporción de zoom	Óptico	32x
Proporción de apertura máx. (número F)	Gran angular	1.6
	Tele	4.4
Campo de visión angular	Horizontal	61.8°~2.19°
	Vertical	36.2°~1.24°
Mín. Distancia al objeto		1.5m(4.92ft)
Control de enfoque		Oneshot AF
Tipo de lente		DC auto iris

Desplazamiento / inclinación / rotación

Rango de desplazamiento / inclinación / rotación	Desplazamiento vertical	35º~90º

Operativo

Indicador de dirección	Support
Día / Noche	Auto(ICR)
Compensación de luz de fondo	BLC, HLC, WDR, SSDR
Rango Dinámico Amplio (dB)	120
Reducción de ruido digital	SSNR V

Design and specifications are subject to change without notice. The latest product information / specification can be found at HanwhaVision.com
Hanwha Vision is formerly known as Hanwha Techwin.

© Hanwha Vision CO., LTD. All rights reserved.

Operativo

Estabilización de imagen digital		Support
Desempañador		Support
Detección de movimiento	Cantidad	8ea
	Forma	8point Polygonal zones
Control de ganancia		Low, Middle, High
Balance de blanco		ATW, AWC, Manual, Indoor, Outdoor
Obturador electrónico	Modo	Minimum, Maximum, Anti flicker
	Rango de velocidad	1~1/12,000sec
Interfaz de alarma	Entrada / Salida	Input 1ea, Output 1ea
Activadores de alarma		Analytics, Network disconnect, Alarm input
Eventos de alarma cuando se ha producido activación de alarma		File upload(image): e-mail/FTP, Notification: e-mail,Alarm output,NAS recording at event triggers, Handover: Zoom preset
Entrada de audio		Selectable(mic in/line in)
Salida de audio		Line out
Tipo de luz		IR LED
Longitud visible de luz	IR	70m(229.66ft)
Longitud de onda IR		850nm
Extracción de agua		Support(with Wiper)

Analíticas

Eventos de analíticas	Normal	Defocus detection, Motion detection, Tampering, Fog detection, Face detection, Audio detection, Virtual area(Lotering, Intrusion, Enter/Exit, Appear/Disappear), Virtual line(Crossing, Direction)

Red

Ethernet		RJ-45(10/100BASE-T)
Compresión de vídeo		H.265/H.264: Main/Baseline/High, MJPEG
Compresión de audio		G.711 u-law /G.726 selectable,G.726(ADPCM) 8kHz,G.711 8kHz, G.726: 16kbps,24kbps,32kbps,40kbps, AAC-LC: 48kbps at 16kHz
Códec inteligente		Manual, WiseStream II
Control del Bitrate		H.265/H.264: CBR or VBR, MJPEG: VBR
Flujos	Unicast	Up to 20 users
	Multicast	Support
	Múltiples flujos	Up to 10 profiles
Protocolo		IPv4, IPv6, TCP/IP, UDP/IP, RTP(UDP), RTP(TCP), RTCP, RTSP, NTP, HTTP, HTTPS, SSL/TLS, DHCP, FTP, SMTP, ICMP, IGMP, SNMPv1/v2c/v3(MIB-2), ARP, DNS, DDNS, QoS, UPnP, Bonjour, PIM-SM

Design and specifications are subject to change without notice. The latest product information / specification can be found at HanwhaVision.com
Hanwha Vision is formerly known as Hanwha Techwin.

© Hanwha Vision CO., LTD. All rights reserved.

Red

Interfaz de programación de la aplicación	ONVIF	S, G, T
	Otros	SUNAPI(HTTP API), Hanwha Vision Open Platform

Seguridad

S.O. / Protección de firmware	Encrypted firmware
Autenticación del usuario	Digest authentication
Autenticación de red	IEEE 802.1X(EAP-TLS, EAP-LEAP)
Comunicación segura	HTTPS
Control de acceso	IP-based access control
Auditoría	Access / System / Event Log management

General

Memoria	RAM	1GB
	Flash	256MB

Medioambiental y eléctrico

Condición de funcionamiento	Temperaturas	IR Off: -40°C~+60°C(-40°F~+140°F), IR On: -40°C~+55°C(-40°F~+131°F)
	Humedad	0~95% RH(non-condensing)
Condición de almacenamiento	Temperaturas	-30°C~+60°C(-22°F~+140°F)
	Humedad	0~95% RH(non-condensing)
Voltaje de entrada		24VAC
Consumo de corriente	24 VCA	Max. 45W

Mecánico

Color	Silver
Material	Stainless(STS316L)
Dimensiones del producto	175(W)x242.5(H)x320(D)mm(6.89x9.59x12.59")
Peso del producto	11.5kg(25.35lb)

Certificaciones y estándares

Medioambiente	IEC 60529 IP67, IEC 62262 IK10, ATEX II 2 G Ex db op is IIC T6 Gb, II 2 D Ex tb op is IIIC T85°C Db, IECEX Ex db op is IIC T6 Gb, Ex tb op is IIIC T85°C Db, KCs

Design and specifications are subject to change without notice. The latest product information / specification can be found at HanwhaVision.com
Hanwha Vision is formerly known as Hanwha Techwin.

© Hanwha Vision CO., LTD. All rights reserved.

TNO-6321E

2MP Explosion-proof Camera





CAD

Unit: mm [inch]

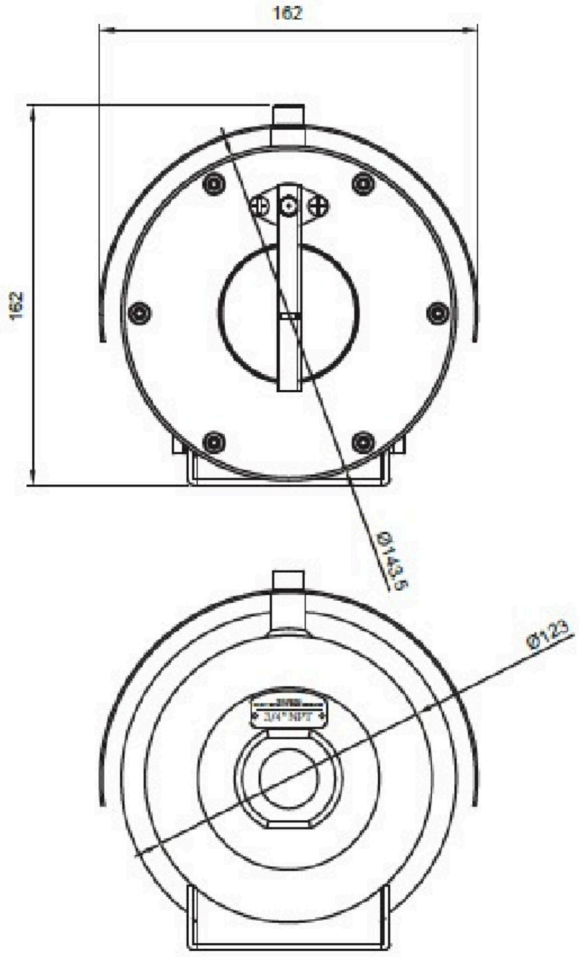

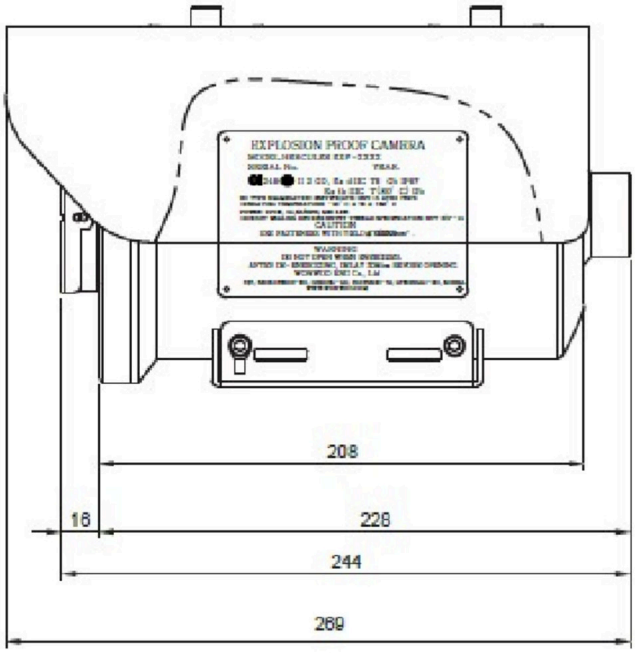

Design and specifications are subject to change without notice. The latest product information / specification can be found at HanwhaVision.com
Hanwha Vision is formerly known as Hanwha Techwin.

© Hanwha Vision CO., LTD. All rights reserved.