

Network

TNO-6321E

2MP Explosion-proof Camera

Key Features

- Max. 2MP (1920 x 1080) resolution
- H: 61.8˚(Wide)~2.19˚(Tele) / V: 36.2˚(Wide)~1.24˚(Tele) field of view
- Color: 0.05Lux (1/30sec, F1.6), B/W: 0.005 Lux (1/30sec, F1.6)
- H.264, H.265, MJPEG codec, WiseStream II
- Day & Night (ICR), WDR (120dB)
- Face detection, Tampering, Virtual line support
- Explosion-proof certificate : CE2460, EX II 2 GD, Ex d IIC T6 Gb IP67 Ex tb IIIC T80°C Db
- Stainless 316L, Built-in Wiper
- IP67, IK10

Design and specifications are subject to change without notice. The latest product information / specification can be found at HanwhaVision.com
Hanwha Vision is formerly known as Hanwha Techwin.

© Hanwha Vision CO., LTD. All rights reserved.

TNO-6321E

2MP Explosion-proof Camera



Specifications

Video

Imaging Device	Size	1/2.8"
	Type	CMOS
Resolution		1920x1080, 1280x1024, 1280x960, 1280x720, 1024x768, 800x600, 800x448, 720x576, 720x480, 640x480, 640x360, 320x240
Max. Framerate	H.265/H.264	60fps/50fps(60Hz/50Hz)
	MJPEG	30fps
Min. Illumination (Lux)	Color(1/30sec, 30IRE)	0.05
	BW(1/30sec, 30IRE)	0.005

Lens

Focal Length (mm)		4.44~142.6
Zoom Ratio	Optical	32x
Max Aperture Ratio (F number)	Wide	1.6
	Tele	4.4
Angular Field of View	Horizontal	61.8°~2.19°
	Vertical	36.2°~1.24°
Min. Object Distance		1.5m(4.92ft)
Focus Control		Oneshot AF
Lens Type		DC auto iris

Pan / Tilt / Rotate

Pan / Tilt / Rotate Range	Tilt	35º~90º

Operational

Direction Indicator	Support
Day & Night	Auto(ICR)
Backlight Compensation	BLC, HLC, WDR, SSDR
Wide Dynamic Range (dB)	120
Digital Noise Reduction	SSNR V
Digital Image Stabilization	Support

Design and specifications are subject to change without notice. The latest product information / specification can be found at HanwhaVision.com
Hanwha Vision is formerly known as Hanwha Techwin.

© Hanwha Vision CO., LTD. All rights reserved.

Operational

Defog		Support
Motion Detection	Quantity	8ea
	Shape	8point Polygonal zones
Gain Control		Low, Middle, High
White Balance		ATW, AWC, Manual, Indoor, Outdoor
Electronic Shutter	Mode	Minimum, Maximum, Anti flicker
	Speed Range	1~1/12,000sec
Alarm Interface	In/Out	Input 1ea, Output 1ea
Alarm Triggers		Analytics, Network disconnect, Alarm input
Alarm Events When Alarm Trigger Occurred		File upload(image): e-mail/FTP, Notification: e-mail,Alarm output,NAS recording at event triggers, Handover: Zoom preset
Audio In		Selectable(mic in/line in)
Audio Out		Line out
Light Type		IR LED
Light Viewable Length	IR	70m(229.66ft)
IR Wavelength		850nm
Water Removal		Support(with Wiper)

Analytics

Analytics Events	Normal	Defocus detection, Motion detection, Tampering, Fog detection, Face detection, Audio detection, Virtual area(Lotering, Intrusion, Enter/Exit, Appear/Disappear), Virtual line(Crossing, Direction)

Network

Ethernet		RJ-45(10/100BASE-T)
Video Compression		H.265/H.264: Main/Baseline/High, MJPEG
Audio Compression		G.711 u-law /G.726 selectable,G.726(ADPCM) 8kHz,G.711 8kHz, G.726: 16kbps,24kbps,32kbps,40kbps, AAC-LC: 48kbps at 16kHz
Smart Codec		Manual, WiseStream II
Bitrate Control		H.265/H.264: CBR or VBR, MJPEG: VBR
Streaming	Unicast	Up to 20 users
	Multicast	Support
	Multiple Streaming	Up to 10 profiles
Protocol		IPv4, IPv6, TCP/IP, UDP/IP, RTP(UDP), RTP(TCP), RTCP, RTSP, NTP, HTTP, HTTPS, SSL/TLS, DHCP, FTP, SMTP, ICMP, IGMP, SNMPv1/v2c/v3(MIB-2), ARP, DNS, DDNS, QoS, UPnP, Bonjour, PIM-SM
Application Programming Interface	ONVIF	S, G, T
	Others	SUNAPI(HTTP API), Hanwha Vision Open Platform

Design and specifications are subject to change without notice. The latest product information / specification can be found at HanwhaVision.com
Hanwha Vision is formerly known as Hanwha Techwin.

© Hanwha Vision CO., LTD. All rights reserved.

Security

OS / Firmware Protect		Encrypted firmware
User authentication		Digest authentication
Network authentication		IEEE 802.1X(EAP-TLS, EAP-LEAP)
Secure Communication		HTTPS
Access Control		IP-based access control
Audit		Access / System / Event Log management

General

Memory	RAM	1GB
	Flash	256MB

Environmental & Electrical

Operating Condition	Temperature	IR Off: -40°C~+60°C(-40°F~+140°F), IR On: -40°C~+55°C(-40°F~+131°F)
	Humidity	0~95% RH(non-condensing)
Storage Condition	Temperature	-30°C~+60°C(-22°F~+140°F)
	Humidity	0~95% RH(non-condensing)
Input Voltage		24VAC
Power Consumption	24VAC	Max. 45W

Mechanical

Color	Silver
Material	Stainless(STS316L)
Product Dimensions	175(W)x242.5(H)x320(D)mm(6.89x9.59x12.59")
Product Weight	11.5kg(25.35lb)

Certifications & Standards

Environment	IEC 60529 IP67, IEC 62262 IK10, ATEX II 2 G Ex db op is IIC T6 Gb, II 2 D Ex tb op is IIIC T85°C Db, IECEX Ex db op is IIC T6 Gb, Ex tb op is IIIC T85°C Db, KCs

Design and specifications are subject to change without notice. The latest product information / specification can be found at HanwhaVision.com
Hanwha Vision is formerly known as Hanwha Techwin.

© Hanwha Vision CO., LTD. All rights reserved.

TNO-6321E

2MP Explosion-proof Camera





CAD

Unit: mm [inch]

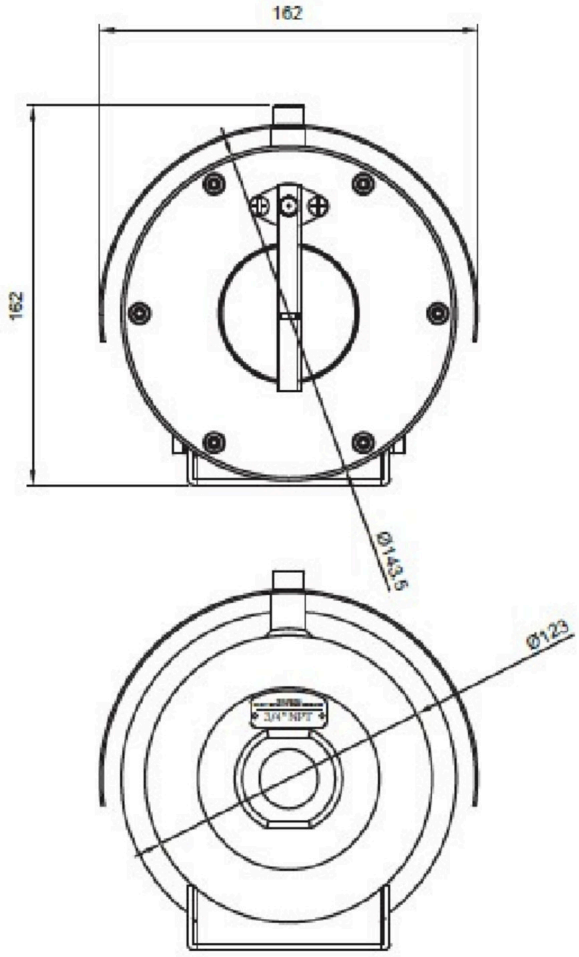

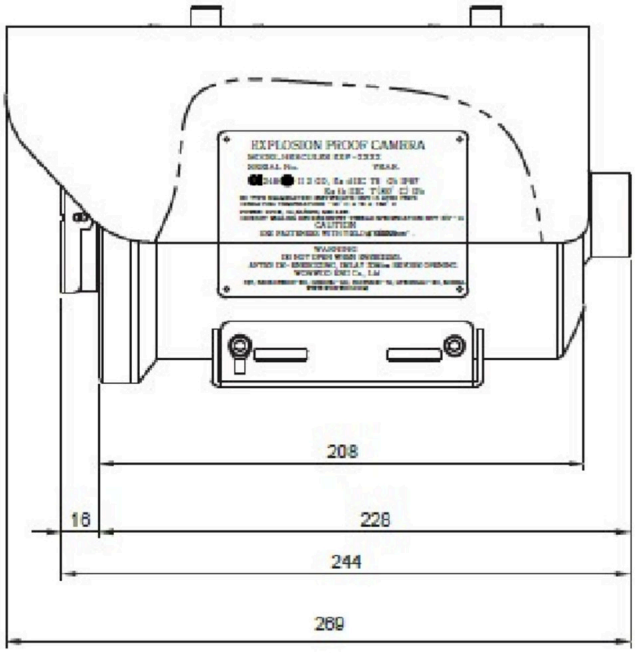

Design and specifications are subject to change without notice. The latest product information / specification can be found at HanwhaVision.com
Hanwha Vision is formerly known as Hanwha Techwin.

© Hanwha Vision CO., LTD. All rights reserved.

Compatible Devices



SBE-100PM



SBE-100WM

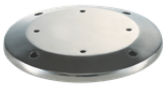

SBE-100B

Design and specifications are subject to change without notice. The latest product information / specification can be found at HanwhaVision.com
Hanwha Vision is formerly known as Hanwha Techwin.

© Hanwha Vision CO., LTD. All rights reserved.