

Network

TNO-6321E

2MP Explosion-proof Camera

Key Features

- Max. 2MP (1920 x 1080) resolution
- H: 61.8(Wide)~2.19(Tele) / V: 36.2(Wide)~1.24(Tele) field of view
- Colour: 0.05Lux (1/30sec, F1.6), B/W: 0.005 Lux (1/30sec, F1.6)
- H.264, H.265, MJPEG codec, WiseStream II
- Day & Night (ICR), WDR (120dB)
- Face detection, Tampering, Virtual line support
- Explosion-proof certificate : CE2460, EX II 2 GD, Ex d IIC T6 Gb
- IP67 Ex tb IIIC T80°C Db
- Stainless 316L, Built-in Wiper
- IP67, IK10

Design and specifications are subject to change without notice. The latest product information / specification can be found at HanwhaVision.com
Hanwha Vision is formerly known as Hanwha Techwin.

© Hanwha Vision CO., LTD. All rights reserved.

TNO-6321E

2MP Explosion-proof Camera



Specifications

Video

Dispositivo di imaging	Dimensioni	1/2.8"
	Tipo	CMOS
Risoluzione		1920x1080, 1280x1024, 1280x960, 1280x720, 1024x768, 800x600, 800x448, 720x576, 720x480, 640x480, 640x360, 320x240
Max. Framerate	H.265/H.264	60fps/50fps(60Hz/50Hz)
	MJPEG	30fps
Min. Illuminazione (Lux)	Colore (1/30 sec, 30IRE)	0.05
	B/N (1/30 sec, 30IRE)	0.005

Ottica

Lunghezza focale (mm)		4.44~142.6
Rapporto di zoom	Ottico	32x
Rapporto di apertura massimo (numero F)	Grandangolo	1.6
	Telescopico	4.4
Campo visivo angolare	Orizzontale	61.8°~2.19°
	Verticale	36.2°~1.24°
Minimo Distanza oggetto		1.5m(4.92ft)
Controllo messa a fuoco		Oneshot AF
Tipo di Ottica		DC auto iris

Panoramica / Inclina / Ruota

Intervallo Panoramica / Inclinazione / Rotazione	Inclina	35º~90º

Efficienza

Indicatore di direzione	Support
Giorno e notte	Auto(ICR)
Compensazione retroilluminazione	BLC, HLC, WDR, SSDR
Wide Dynamic Range (dB)	120
Riduzione digitale del rumore	SSNR V
Stabilizzazione dell'immagine	Support

Design and specifications are subject to change without notice. The latest product information / specification can be found at HanwhaVision.com
Hanwha Vision is formerly known as Hanwha Techwin.

© Hanwha Vision CO., LTD. All rights reserved.

Efficienza

Defog		Support
Rilevamento movimento	Quantità	8ea
	Forma	8point Polygonal zones
Controllo guadagno		Low, Middle, High
Bilanciamento del bianco		ATW, AWC, Manual, Indoor, Outdoor
Otturatore elettronico	Modalità	Minimum, Maximum, Anti flicker
	Intervallo di velocità	1~1/12,000sec
Interfaccia allarme	Ingresso/Uscita	Input 1ea, Output 1ea
Attivazione allarme		Analytics, Network disconnect, Alarm input
Eventi di allarme quando si è verificata l'attivazione allarme		File upload(image): e-mail/FTP, Notification: e-mail,Alarm output,NAS recording at event triggers, Handover: Zoom preset
Ingresso audio		Selectable(mic in/line in)
Uscita audio		Line out
Tipo di luce		IR LED
Lunghezza visibile alla luce	IR	70m(229.66ft)
Lunghezza d'onda IR		850nm
Rimozione dell'acqua		Support(with Wiper)

Analisi

Eventi analitici	Normale	Defocus detection, Motion detection, Tampering, Fog detection, Face detection, Audio detection, Virtual area(Lotering, Intrusion, Enter/Exit, Appear/Disappear), Virtual line(Crossing, Direction)

Rete

Ethernet		RJ-45(10/100BASE-T)
Compressione video		H.265/H.264: Main/Baseline/High, MJPEG
Compressione audio		G.711 u-law /G.726 selectable,G.726(ADPCM) 8kHz,G.711 8kHz, G.726: 16kbps,24kbps,32kbps,40kbps, AAC-LC: 48kbps at 16kHz
Codec intelligente		Manual, WiseStream II
Controllo bitrate		H.265/H.264: CBR or VBR, MJPEG: VBR
Streaming	Unicast	Up to 20 users
	Multicast	Support
	Streaming multiplo	Up to 10 profiles
Protocollo		IPv4, IPv6, TCP/IP, UDP/IP, RTP(UDP), RTP(TCP), RTCP, RTSP, NTP, HTTP, HTTPS, SSL/TLS, DHCP, FTP, SMTP, ICMP, IGMP, SNMPv1/v2c/v3(MIB-2), ARP, DNS, DDNS, QoS, UPnP, Bonjour, PIM-SM
Interfaccia di programmazione dell'applicazione	ONVIF	S, G, T
	Altri	SUNAPI(HTTP API), Hanwha Vision Open Platform

Design and specifications are subject to change without notice. The latest product information / specification can be found at HanwhaVision.com
Hanwha Vision is formerly known as Hanwha Techwin.

© Hanwha Vision CO., LTD. All rights reserved.

Sicurezza

Protezione OS / Firmware	Encrypted firmware
Autenticazione utente	Digest authentication
Autenticazione di rete	IEEE 802.1X(EAP-TLS, EAP-LEAP)
Comunicazione sicura	HTTPS
Controllo degli accessi	IP-based access control
Audit	Access / System / Event Log management

Generale

Memoria	RAM	1GB
	Flash	256MB

Ambientale ed elettrico

Condizione operativa	Temperatura	IR Off: -40°C~+60°C(-40°F~+140°F), IR On: -40°C~+55°C(-40°F~+131°F)
	Umidità	0~95% RH(non-condensing)
Condizioni di conservazione	Temperatura	-30°C~+60°C(-22°F~+140°F)
	Umidità	0~95% RH(non-condensing)
Tensione di ingresso		24VAC
Consumo energetico	24 V CA	Max. 45W

Meccanico

Colore	Silver
Materiale	Stainless(STS316L)
Dimensioni del prodotto	175(W)x242.5(H)x320(D)mm(6.89x9.59x12.59")
Peso del prodotto	11.5kg(25.35lb)

Certificazioni e standard

Ambientale	IEC 60529 IP67, IEC 62262 IK10, ATEX II 2 G Ex db op is IIC T6 Gb, II 2 D Ex tb op is IIIC T85°C Db, IECEX Ex db op is IIC T6 Gb, Ex tb op is IIIC T85°C Db, KCs

Design and specifications are subject to change without notice. The latest product information / specification can be found at HanwhaVision.com
Hanwha Vision is formerly known as Hanwha Techwin.

© Hanwha Vision CO., LTD. All rights reserved.

TNO-6321E

2MP Explosion-proof Camera





CAD

Unit: mm [inch]

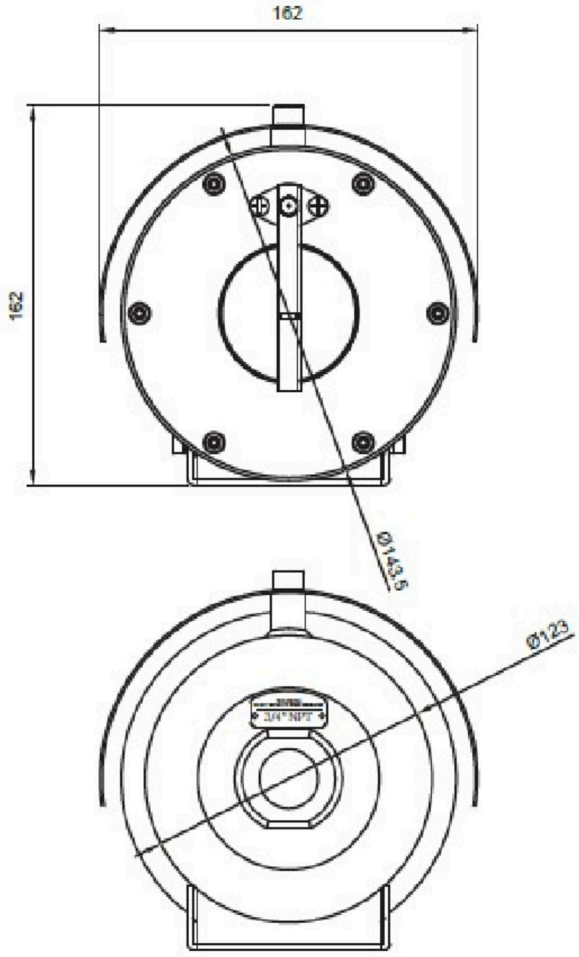

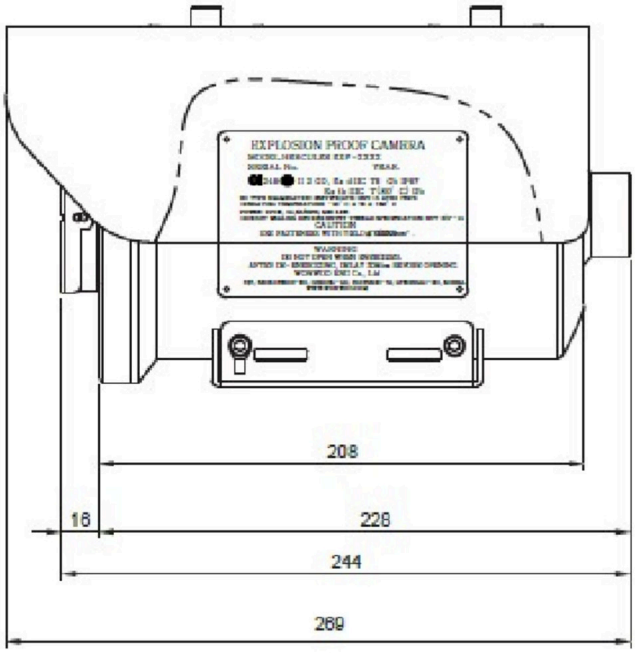

Design and specifications are subject to change without notice. The latest product information / specification can be found at HanwhaVision.com
Hanwha Vision is formerly known as Hanwha Techwin.

© Hanwha Vision CO., LTD. All rights reserved.