

Network

# TNO-6321E

## 2MP Explosion-proof Camera

## Key Features

- Max. 2MP (1920 x 1080) resolution
- H: 61.8˚(Wide)~2.19˚(Tele) / V: 36.2˚(Wide)~1.24˚(Tele) field of view
- Color: 0.05Lux (1/30sec, F1.6), B/W: 0.005 Lux (1/30sec, F1.6)
- H.264, H.265, MJPEG codec, WiseStream II
- Day & Night (ICR), WDR (120dB)
- Face detection, Tampering, Virtual line support
- Explosion-proof certificate : CE2460, EX II 2 GD, Ex d IIC T6 Gb IP67 Ex tb IIIC T80°C Db
- Stainless 316L, Built-in Wiper
- IP67, IK10

Design and specifications are subject to change without notice. The latest product information / specification can be found at HanwhaVision.com
Hanwha Vision is formerly known as Hanwha Techwin.

© Hanwha Vision CO., LTD. All rights reserved.

# TNO-6321E

2MP Explosion-proof Camera



## Specifications

### Video

| | | |
|---|---|---|
| Imaging Device | Size | 1/2.8" |
| | Type | CMOS |
| Resolution | | 1920x1080, 1280x1024, 1280x960, 1280x720, 1024x768, 800x600, 800x448, 720x576, 720x480, 640x480, 640x360, 320x240 |
| Max. Framerate | H.265/H.264 | 60fps/50fps(60Hz/50Hz) |
| | MJPEG | 30fps |
| Min. Illumination (Lux) | Color(1/30sec, 30IRE) | 0.05 |
| | BW(1/30sec, 30IRE) | 0.005 |

### Lens

| | | |
|---|---|---|
| Focal Length (mm) | | 4.44~142.6 |
| Zoom Ratio | Optical | 32x |
| Max Aperture Ratio (F number) | Wide | 1.6 |
| | Tele | 4.4 |
| Angular Field of View | Horizontal | 61.8°~2.19° |
| | Vertical | 36.2°~1.24° |
| Min. Object Distance | | 1.5m(4.92ft) |
| Focus Control | | Oneshot AF |
| Lens Type | | DC auto iris |

### Pan / Tilt / Rotate

| | | |
|---|---|---|
| Pan / Tilt / Rotate Range | Tilt | 35º~90º |

### Operational

| | |
|---|---|
| Direction Indicator | Support |
| Day & Night | Auto(ICR) |
| Backlight Compensation | BLC, HLC, WDR, SSDR |
| Wide Dynamic Range (dB) | 120 |
| Digital Noise Reduction | SSNR V |
| Digital Image Stabilization | Support |

Design and specifications are subject to change without notice. The latest product information / specification can be found at HanwhaVision.com
Hanwha Vision is formerly known as Hanwha Techwin.

© Hanwha Vision CO., LTD. All rights reserved.

## Operational

| | | |
|---|---|---|
| **Defog** | | Support |
| **Motion Detection** | Quantity | 8ea |
| | Shape | 8point Polygonal zones |
| **Gain Control** | | Low, Middle, High |
| **White Balance** | | ATW, AWC, Manual, Indoor, Outdoor |
| **Electronic Shutter** | Mode | Minimum, Maximum, Anti flicker |
| | Speed Range | 1~1/12,000sec |
| **Alarm Interface** | In/Out | Input 1ea, Output 1ea |
| **Alarm Triggers** | | Analytics, Network disconnect, Alarm input |
| **Alarm Events When Alarm Trigger Occurred** | | File upload(image): e-mail/FTP,<br>Notification: e-mail,Alarm output,NAS recording at event triggers,<br>Handover: Zoom preset |
| **Audio In** | | Selectable(mic in/line in) |
| **Audio Out** | | Line out |
| **Light Type** | | IR LED |
| **Light Viewable Length** | IR | 70m(229.66ft) |
| **IR Wavelength** | | 850nm |
| **Water Removal** | | Support(with Wiper) |

## Analytics

| | | |
|---|---|---|
| **Analytics Events** | Normal | Defocus detection, Motion detection, Tampering, Fog detection, Face detection, Audio detection, Virtual area(Lotering, Intrusion, Enter/Exit, Appear/Disappear), Virtual line(Crossing, Direction) |

## Network

| | | |
|---|---|---|
| **Ethernet** | | RJ-45(10/100BASE-T) |
| **Video Compression** | | H.265/H.264: Main/Baseline/High, MJPEG |
| **Audio Compression** | | G.711 u-law /G.726 selectable,G.726(ADPCM) 8kHz,G.711 8kHz,<br>G.726: 16kbps,24kbps,32kbps,40kbps,<br>AAC-LC: 48kbps at 16kHz |
| **Smart Codec** | | Manual, WiseStream II |
| **Bitrate Control** | | H.265/H.264: CBR or VBR,<br>MJPEG: VBR |
| **Streaming** | Unicast | Up to 20 users |
| | Multicast | Support |
| | Multiple Streaming | Up to 10 profiles |
| **Protocol** | | IPv4, IPv6, TCP/IP, UDP/IP, RTP(UDP), RTP(TCP), RTCP, RTSP, NTP, HTTP, HTTPS, SSL/TLS, DHCP, FTP, SMTP, ICMP, IGMP, SNMPv1/v2c/v3(MIB-2), ARP, DNS, DDNS, QoS, UPnP, Bonjour, PIM-SM |
| **Application Programming Interface** | ONVIF | S, G, T |
| | Others | SUNAPI(HTTP API), Hanwha Vision Open Platform |

Design and specifications are subject to change without notice. The latest product information / specification can be found at HanwhaVision.com
Hanwha Vision is formerly known as Hanwha Techwin.

© Hanwha Vision CO., LTD. All rights reserved.

## Security

| | | |
|---|---|---|
| **OS / Firmware Protect** | | Encrypted firmware |
| **User authentication** | | Digest authentication |
| **Network authentication** | | IEEE 802.1X(EAP-TLS, EAP-LEAP) |
| **Secure Communication** | | HTTPS |
| **Access Control** | | IP-based access control |
| **Audit** | | Access / System / Event Log management |

## General

| | | |
|---|---|---|
| **Memory** | RAM | 1GB |
| | Flash | 256MB |

## Environmental & Electrical

| | | |
|---|---|---|
| **Operating Condition** | Temperature | IR Off: -40°C~+60°C(-40°F~+140°F),<br>IR On: -40°C~+55°C(-40°F~+131°F) |
| | Humidity | 0~95% RH(non-condensing) |
| **Storage Condition** | Temperature | -30°C~+60°C(-22°F~+140°F) |
| | Humidity | 0~95% RH(non-condensing) |
| **Input Voltage** | | 24VAC |
| **Power Consumption** | 24VAC | Max. 45W |

## Mechanical

| | |
|---|---|
| **Color** | Silver |
| **Material** | Stainless(STS316L) |
| **Product Dimensions** | 175(W)x242.5(H)x320(D)mm(6.89x9.59x12.59") |
| **Product Weight** | 11.5kg(25.35lb) |

## Certifications & Standards

| | |
|---|---|
| **Environment** | IEC 60529 IP67, IEC 62262 IK10, ATEX II 2 G Ex db op is IIC T6 Gb, II 2 D Ex tb op is IIIC T85°C Db, IECEX Ex db op is IIC T6 Gb, Ex tb op is IIIC T85°C Db, KCs |

Design and specifications are subject to change without notice. The latest product information / specification can be found at HanwhaVision.com
Hanwha Vision is formerly known as Hanwha Techwin.

© Hanwha Vision CO., LTD. All rights reserved.

# TNO-6321E

2MP Explosion-proof Camera



## CAD

Unit: mm [inch]

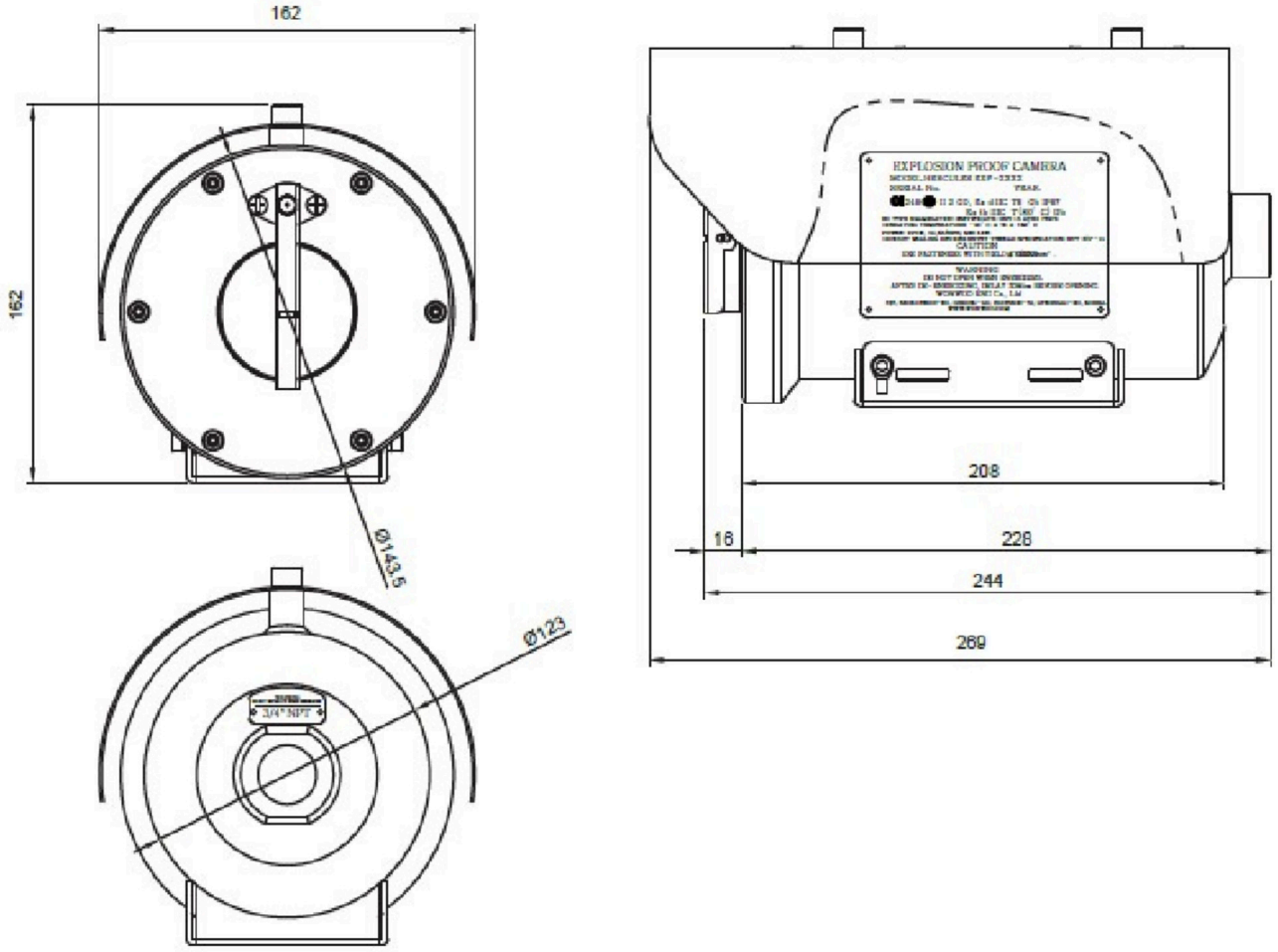


Design and specifications are subject to change without notice. The latest product information / specification can be found at HanwhaVision.com
Hanwha Vision is formerly known as Hanwha Techwin.

© Hanwha Vision CO., LTD. All rights reserved.

## Compatible Devices



SBE-100PM



SBE-100WM

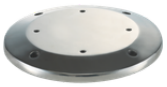

SBE-100B

Design and specifications are subject to change without notice. The latest product information / specification can be found at HanwhaVision.com
Hanwha Vision is formerly known as Hanwha Techwin.

© Hanwha Vision CO., LTD. All rights reserved.