

Network

TNO-6321E

2MP Explosion-proof Camera

Key Features

- Max. 2MP (1920 x 1080) resolution
- H: 61.8(Wide)~2.19(Tele) / V: 36.2(Wide)~1.24(Tele) field of view
- Colour: 0.05Lux (1/30sec, F1.6), B/W: 0.005 Lux (1/30sec, F1.6)
- H.264, H.265, MJPEG codec, WiseStream II
- Day & Night (ICR), WDR (120dB)
- Face detection, Tampering, Virtual line support
- Explosion-proof certificate : CE2460, EX II 2 GD, Ex d IIC T6 Gb
- IP67 Ex tb IIIC T80°C Db
- Stainless 316L, Built-in Wiper
- IP67, IK10

Design and specifications are subject to change without notice. The latest product information / specification can be found at HanwhaVision.com
Hanwha Vision is formerly known as Hanwha Techwin.

© Hanwha Vision CO., LTD. All rights reserved.

TNO-6321E

2MP Explosion-proof Camera





Specifications

Video

Görüntüleme Aygıtı	Boyut	1/2.8"
	Tür	CMOS
Çözünürlük		1920x1080, 1280x1024, 1280x960, 1280x720, 1024x768, 800x600, 800x448, 720x576, 720x480, 640x480, 640x360, 320x240
En Fazla Kare hızı	H.265/H.264	60fps/50fps(60Hz/50Hz)
	MJPEG	30fps
Min. Aydınlatma (Lüks)	Renk(1/30sn, 30IRE)	0.05
	SB(1/30sn, 30IRE)	0.005

Lens

Odak Uzunluğu (mm)		4.44~142.6
Yakınlaştırma Oranı	Optik	32x
Maks. Diyafram Açıklığı Oranı (F numarası)	Geniş	1.6
	Tele	4.4
Açısal Görüş Alanı	Yatay	61.8°~2.19°
	Dikey	36.2°~1.24°
Min. Nesne Mesafesi		1.5m(4.92ft)
Odak Kontrolü		Oneshot AF
Lens Tipi		DC auto iris

Pan / Tilt / Döndürme

Pan / Tilt / Döndürme Aralığı	Tilt	35º~90º

İşletimsel

Yön Göstergesi	Support
Gündüz ve Gece	Auto(ICR)
Arka Işık Dengeleme	BLC, HLC, WDR, SSDR
Geniş Dinamik Aralık (dB)	120
Dijital Gürültü Azaltma	SSNR V

Design and specifications are subject to change without notice. The latest product information / specification can be found at HanwhaVision.com
Hanwha Vision is formerly known as Hanwha Techwin.

© Hanwha Vision CO., LTD. All rights reserved.

İşletimsel

Dijital Görüntü Sabitleme		Support
Sis Giderme		Support
Hareket Algılama	Miktar	8ea
	Şekil	8point Polygonal zones
Kazanç Kontrolü		Low, Middle, High
Beyaz Dengesi		ATW, AWC, Manual, Indoor, Outdoor
Elektronik Obtüratör	Mod	Minimum, Maximum, Anti flicker
	Hız Aralığı	1~1/12,000sec
Alarm Arayüzü	Giriş/Çıkış	Input 1ea, Output 1ea
Alarm Tetikleyiciler		Analytics, Network disconnect, Alarm input
Alarm Tetikleyici Gerçekleştiğinde Alarm Olayları		File upload(image): e-mail/FTP, Notification: e-mail,Alarm output,NAS recording at event triggers, Handover: Zoom preset
Ses Girişi		Selectable(mic in/line in)
Ses Çıkışı		Line out
Işık Türü		IR LED
Işık Görüntülenebilir Uzunluğu	IR	70m(229.66ft)
IR Dalga Boyu		850nm
Su Giderme		Support(with Wiper)

Analiz Araçları

Analiz Araçları Olayları	Normal	Defocus detection, Motion detection, Tampering, Fog detection, Face detection, Audio detection, Virtual area(Lotering, Intrusion, Enter/Exit, Appear/Disappear), Virtual line(Crossing, Direction)

Ağ

Ethernet		RJ-45(10/100BASE-T)
Video Sıkıştırma		H.265/H.264: Main/Baseline/High, MJPEG
Ses Sıkıştırma		G.711 u-law /G.726 selectable,G.726(ADPCM) 8kHz,G.711 8kHz, G.726: 16kbps,24kbps,32kbps,40kbps, AAC-LC: 48kbps at 16kHz
Smart Codec		Manual, WiseStream II
Bit Hızı Kontrolü		H.265/H.264: CBR or VBR, MJPEG: VBR
Yayın akışı	Unicast	Up to 20 users
	Multicast	Support
	Çoklu Yayın Akışı	Up to 10 profiles
Protokol		IPv4, IPv6, TCP/IP, UDP/IP, RTP(UDP), RTP(TCP), RTCP, RTSP, NTP, HTTP, HTTPS, SSL/TLS, DHCP, FTP, SMTP, ICMP, IGMP, SNMPv1/v2c/v3(MIB-2), ARP, DNS, DDNS, QoS, UPnP, Bonjour, PIM-SM

Design and specifications are subject to change without notice. The latest product information / specification can be found at HanwhaVision.com
Hanwha Vision is formerly known as Hanwha Techwin.

© Hanwha Vision CO., LTD. All rights reserved.

Ağ

Uygulama Programlama Arayüzü	ONVIF	S, G, T
	Diğer	SUNAPI(HTTP API), Hanwha Vision Open Platform

Güvenlik

İS / Yerleşik Yazılım Koruması	Encrypted firmware
Kullanıcı kimlik doğrulaması	Digest authentication
Ağ kimlik doğrulaması	IEEE 802.1X(EAP-TLS, EAP-LEAP)
Güvenli İletişim	HTTPS
Erişim Denetimi	IP-based access control
Denetim	Access / System / Event Log management

Genel

Bellek	RAM	1GB
	Flaş	256MB

Çevresel ve Elektriksel

Çalışma Koşulu	Sıcaklık	IR Off: -40°C~+60°C(-40°F~+140°F), IR On: -40°C~+55°C(-40°F~+131°F)
	Nemlilik	0~95% RH(non-condensing)
Depolama Koşulu	Sıcaklık	-30°C~+60°C(-22°F~+140°F)
	Nemlilik	0~95% RH(non-condensing)
Giriş Voltajı		24VAC
Güç Tüketimi	24VAC	Max. 45W

Mekanik

Renk	Silver
Malzeme	Stainless(STS316L)
Ürün Boyutları	175(W)x242.5(H)x320(D)mm(6.89x9.59x12.59")
Ürün Ağırlığı	11.5kg(25.35lb)

Sertifikasyonlar ve Standartlar

Ortam	IEC 60529 IP67, IEC 62262 IK10, ATEX II 2 G Ex db op is IIC T6 Gb, II 2 D Ex tb op is IIIC T85°C Db, IECEX Ex db op is IIC T6 Gb, Ex tb op is IIIC T85°C Db, KCs

Design and specifications are subject to change without notice. The latest product information / specification can be found at HanwhaVision.com
Hanwha Vision is formerly known as Hanwha Techwin.

© Hanwha Vision CO., LTD. All rights reserved.

TNO-6321E

2MP Explosion-proof Camera





CAD

Unit: mm [inch]

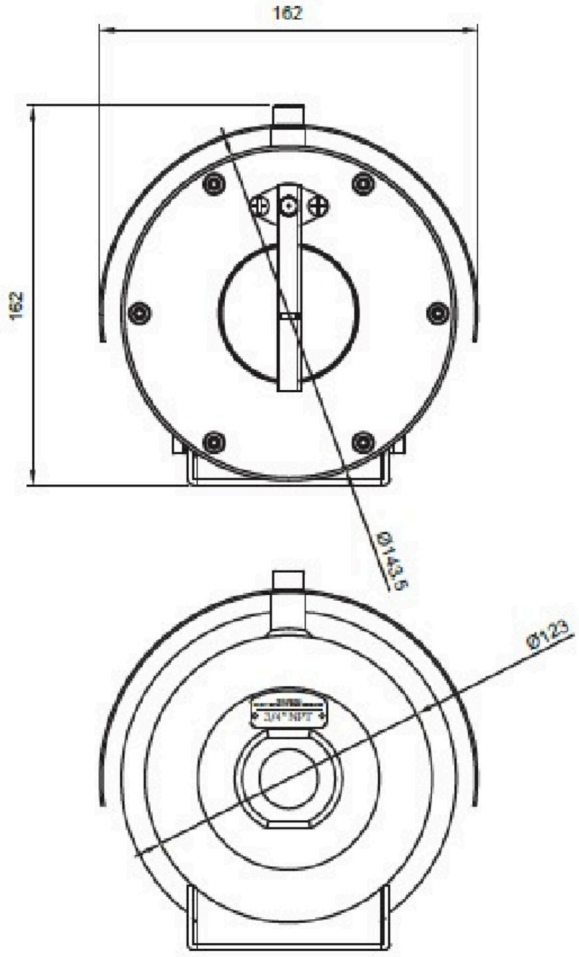

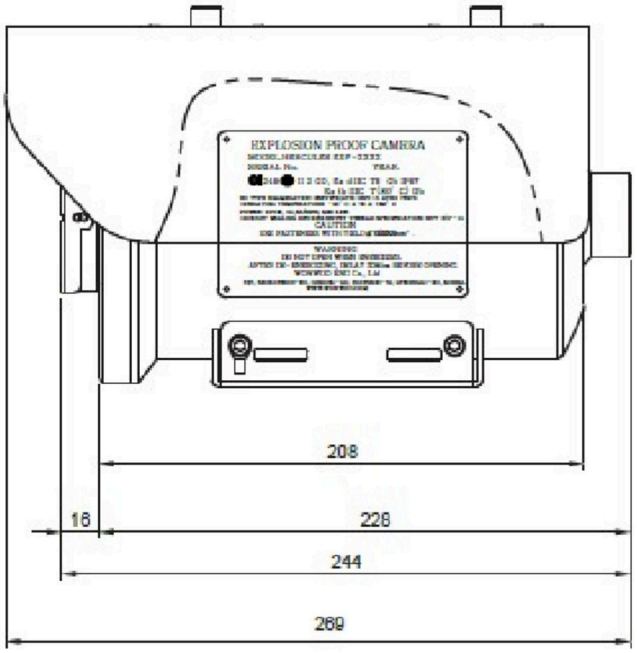

Design and specifications are subject to change without notice. The latest product information / specification can be found at HanwhaVision.com
Hanwha Vision is formerly known as Hanwha Techwin.

© Hanwha Vision CO., LTD. All rights reserved.