Network

TNO-6322ER

2MP Explosion-proof Camera

Key Features

- Max. 2MP (1920 x 1080) resolution
- H: 61.8˚(Wide)~2.19˚(Tele) / V: 36.2˚(Wide)~1.24˚(Tele) Field of View
- Max. 60fps/50fps (60Hz/50Hz)
- H.265, H.264, MJPEG codec, WiseStream II
- IR viewable length 70m
- Day & Night (Auto ICR), WDR (120dB)
- Explosion-proof certificate: IECEx, ATEX, KCs, PESO
- Stainless 316L, Built-in wiper
- IP67, IK10

Compatible Devices

SBE-100PM

SBE-100WM

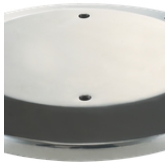

SBE-100B

Design and specifications are subject to change without notice. The latest product information / specification can be found at HanwhaVision.com
Hanwha Vision is formerly known as Hanwha Techwin.

© Hanwha Vision CO., LTD. All rights reserved.

TNO-6322ER

2MP Explosion-proof Camera

Specifications

映像

Imaging Device	サイズ	1/2.8"
	タイプ	CMOS
解像度		1920x1080, 1280x1024, 1280x960, 1280x720, 1024x768, 800x600, 800x448, 720x576, 720x480, 640x480, 640x360, 320x240
Max. Framerate	H.265/H.264	60fps/50fps(60Hz/50Hz)
	MJPEG	30fps
Min. Illumination (Lux)	Color(1/30sec, 30IRE)	0.05
	BW(1/30sec, 30IRE)	0.005

レンズ

Focal Length (mm)		4.44~142.6
Zoom Ratio	Optical	32x
Max Aperture Ratio (F number)	Wide	1.6
	Tele	4.4
視野角度	Horizontal	61.8°~2.19°
	Vertical	36.2°~1.24°
Min. Object Distance		1.5m(4.92ft)
Focus Control		Oneshot AF
Lens Type		DC auto iris

Pan / Tilt / Rotate

Pan / Tilt / Rotate Range	Tilt	35º~90º

技能

方向インジケーター	サポート
Day & Night	Auto(ICR)
Backlight Compensation	BLC, HLC , WDR, SSDR
Wide Dynamic Range (dB)	120
Digital Noise Reduction	SSNR V
Digital Image Stabilization	サポート

Design and specifications are subject to change without notice. The latest product information / specification can be found at HanwhaVision.com
Hanwha Vision is formerly known as Hanwha Techwin.

© Hanwha Vision CO., LTD. All rights reserved.

技能

曇り除去		サポート
モーション検知	Quantity	8ea
	Shape	8point Polygonal zones
ゲイン制御		低, 中, 高
ホワイトバランス		ATW, AWC, 手動, 室内, 屋外
Electronic Shutter	モード	最小, 最大, アンチフリッカー
	Speed Range	1~1/12,000sec
Alarm Interface	In/Out	Input 1ea, Output 1ea
Alarm Triggers		分析, ネットワーク切断, アラーム入力
Alarm Events When Alarm Trigger Occurred		File upload(image): e-mail/FTP, Notification: e-mail,アラーム出力,NAS recording at event triggers, Handover: Zoom preset
オーディオ入力		Selectable(mic in/line in)
オーディオ出力		Line out
Light Type		IR LED
Light Viewable Length	IR	70m(229.66ft)
IR Wavelength		850nm
Water Removal		Support(with Wiper)

分析

分析イベント	通常	焦点ぼけ検知, モーション検知, タンパリング, フォグ検出, 顔検出, 音声検出, Virtual area(Lotering, Intrusion, Enter/Exit, Appear/Disappear), Virtual line(Crossing, Direction)

ネットワーク

Ethernet		RJ-45(10/100BASE-T)
映像圧縮		H.265/H.264: Main/Baseline/High, MJPEG
Audio Compression		G.711 u-law /G.726 selectable,G.726(ADPCM) 8kHz,G.711 8kHz, G.726: 16kbps,24kbps,32kbps,40kbps, AAC-LC: 48kbps at 16kHz
Smart codec		手動, WiseStream II
ビットレートコントロール		H.265/H.264: CBR or VBR, MJPEG: VBR
Streaming	Unicast	最大 20ユーザー
	マルチキャスト	サポート
	Multiple Streaming	最大 10プロファイル
プロトコル		IPv4, IPv6, TCP/IP, UDP/IP, RTP(UDP), RTP(TCP), RTCP, RTSP, NTP, HTTP, HTTPS, SSL/TLS, DHCP, FTP, SMTP, ICMP, IGMP, SNMPv1/v2c/v3(MIB-2), ARP, DNS, DDNS, QoS, UPnP, Bonjour, PIM-SM
Application Programming Interface	ONVIF	s, G, T
	その他	SUNAPI(HTTP API), Hanwha Vision Open Platform

Design and specifications are subject to change without notice. The latest product information / specification can be found at HanwhaVision.com
Hanwha Vision is formerly known as Hanwha Techwin.

© Hanwha Vision CO., LTD. All rights reserved.

セキュリティ

OS / Firmware Protect	Encrypted firmware
ユーザー認証	ダイジェスト認証
Network authentication	IEEE 802.1X(EAP-TLS, EAP-LEAP)
Secure Communication	HTTPS
Access Control	IP-based access control
Audit	Access / System / Event Log management

一般

メモリ	RAM	1GB
	フラッシュ	256MB

Environmental & Electrical

動作条件	温度	IR Off: -40°C~+60°C(-40°F~+140°F), IR On: -40°C~+55°C(-40°F~+131°F)
	湿度	0~95% RH(non-condensing)
保管条件	温度	-30°C~+60°C(-22°F~+140°F)
	湿度	0~95% RH(non-condensing)
Input Voltage		24VAC
消費電力	24VAC	Max. 45W

Mechanical

カラー	シルバー
材料	Stainless(STS316L)
Product Dimensions	175(W)x242.5(H)x320(D)mm(6.89x9.59x12.59")
Product Weight	11.5kg(25.35lb)

Certifications & Standards

環境	IEC 60529 IP67, IEC 62262 IK10, ATEX II 2 G Ex db op is IIC T6 Gb, II 2 D Ex tb op is IIIC T85°C Db, IECEX Ex db op is IIC T6 Gb, Ex tb op is IIIC T85°C Db, KCs

Design and specifications are subject to change without notice. The latest product information / specification can be found at HanwhaVision.com
Hanwha Vision is formerly known as Hanwha Techwin.

© Hanwha Vision CO., LTD. All rights reserved.

TNO-6322ER

2MP Explosion-proof Camera

CAD

Unit: mm [inch]

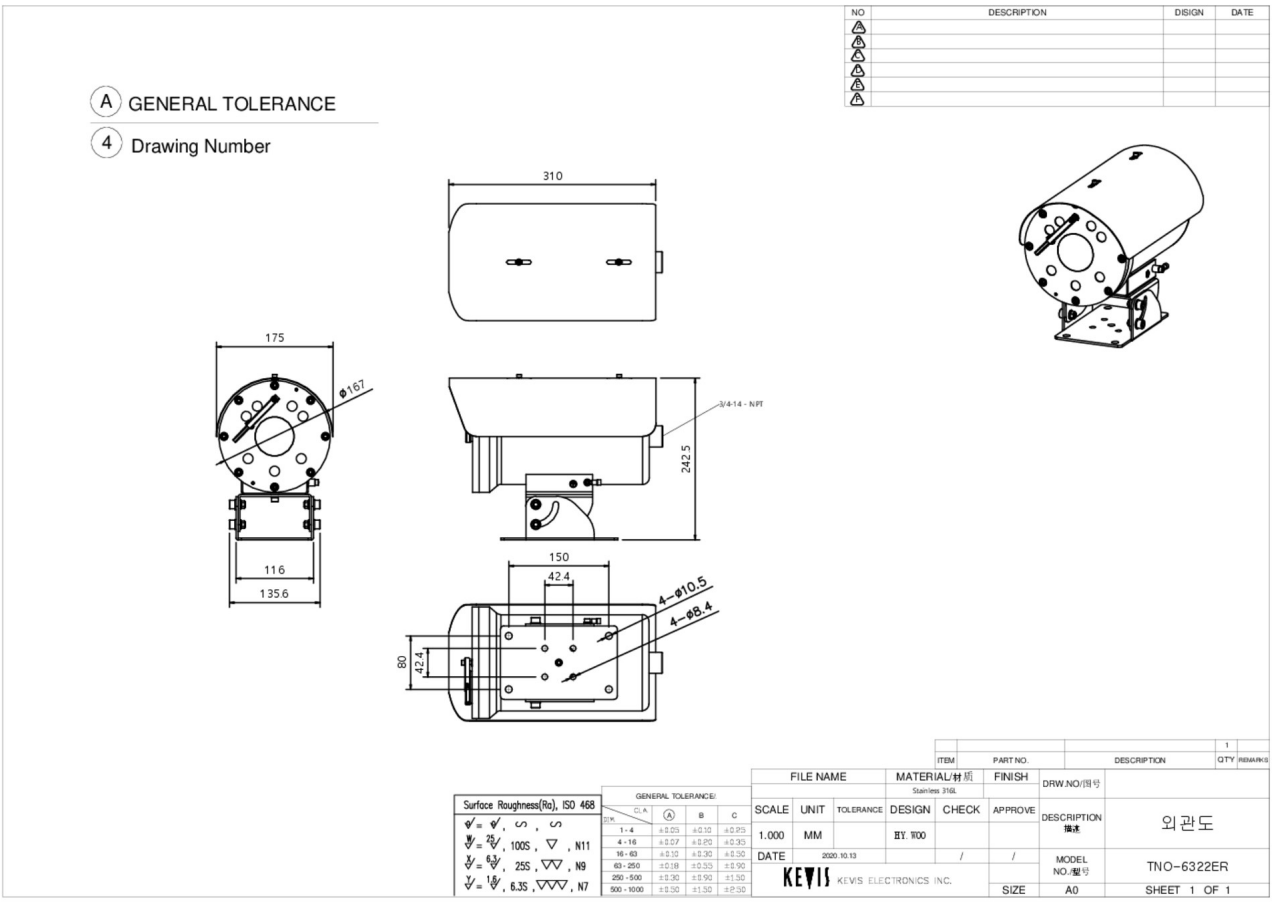

Design and specifications are subject to change without notice. The latest product information / specification can be found at HanwhaVision.com
Hanwha Vision is formerly known as Hanwha Techwin.

© Hanwha Vision CO., LTD. All rights reserved.