

Network Цилиндрические

TNO-7180RLP

High-speed License Plate Capture Camera

Key Features

- 3MP, Color Global Shutter Sensor
- 6.8~120mm(18x) motorized varifocal
- H.265, H.264, MJPEG codec
- Maximum 60fps@3MP all resolutions (H.265, H.264, MJPEG)
- Edge Storage Pre-installed with 32GB Micro SD to support 10,000 LPR images
- WiseStreamII support
- HPoE, 12VDC
- IR Viewable Length 50m(164.04ft)
- IP66, IK10, NEMA 4X, NEMA TS 2(2.2.8, 2.2.9)
- Wisenet Road AI application (Pre-installed)
  - License/Number Plate Recognition
  - Make/Model/Color Recognition
  - Black/White list notification
  - Smart Search (LP/NP, Country, brand, model, color)

*PoE power supply is not included, must be purchased separately if required

Design and specifications are subject to change without notice. The latest product information / specification can be found at HanwhaVision.com
Hanwha Vision is formerly known as Hanwha Techwin.

© Hanwha Vision CO., LTD. All rights reserved.

TNO-7180RLP

High-speed License Plate Capture Camera



Specifications

Video

Imaging Device	Size	1/1.8"
	Type	CMOS
Resolution		2048x1536, 1920x1080, 1280x1024, 1280x960, 1280x720, 1024x768, 800x600, 800x448, 720x576, 720x480, 640x480, 640x360, 320x240
Max. Framerate	H.265/H.264	55fps/50fps(55Hz/50Hz)@3MP mode / 60fps/50fps(60Hz/50Hz)@2MP mode
	MJPEG	5fps
Min. Illumination (Lux)	Color(1/30sec, 30IRE)	0.1
	BW(1/30sec, 30IRE)	0.01
Video Out		CVBS: 1.0 Vp-p / 75Ω composite for installation, USB: Micro USB Type B. Preview and installation ONLY. Requires WiFi dongle.

Lens

Focal Length (mm)		6.8~120
Zoom Ratio	Optical	18x
Max Aperture Ratio (F number)	Wide	1.6
	Tele	4.13
Angular Field of View	Horizontal	54.5°~3.4°
	Vertical	42.3°~2.5°
Min. Object Distance		2m(6.5ft)
Focus Control		Simple focus, Focus save
Lens Type		DC auto iris

Operational

Day & Night		Auto(ICR)
Backlight Compensation		BLC, SSDR
Digital Noise Reduction		SSNR V
Motion Detection	Quantity	8ea
	Shape	8point Polygonal zones

Design and specifications are subject to change without notice. The latest product information / specification can be found at HanwhaVision.com
Hanwha Vision is formerly known as Hanwha Techwin.

© Hanwha Vision CO., LTD. All rights reserved.

Operational

Privacy Masking	Quantity	6ea
	Shape	Rectangular zones
	Color / Option	Gray, Green, Red, Blue, Black, White
Gain Control		Support
White Balance		ATW, AWC, Manual, Indoor, Outdoor
Electronic Shutter	Mode	Minimum, Maximum, Anti flicker, Global shutter mode
	Speed Range	1/25~1/12,000sec
Video Rotation		Flip, Mirror
Serial Interface		RS-485(Samsung-T, Pelco-D/P, Panasonic, Bosch, AD, GE, Vicon, Honeywell)
Alarm Interface	In/Out	4 configurable I/O ports
Alarm Triggers		Analytics, Network disconnect, Alarm input
Alarm Events When Alarm Trigger Occurred		File upload(image): e-mail/FTP, Notification: e-mail, Recording: SD/SDHC/SDXC or NAS recording at event triggers,Alarm output, Handover: PTZ preset,send message by HTTP/HTTPS/TCP
Audio In		Selectable(mic in/line in)
Audio Out		Line out
Light Type		IR LED
Light Viewable Length	IR	50m(164ft)
IR Wavelength		850nm

Analytics

Analytics Events	Normal	Motion detection, Tampering, Virtual area(Lotering, Intrusion, Enter/Exit, Appear/Disappear), Virtual line(Crossing, Direction)

Network

Ethernet		RJ-45(10/100/1000BASE-T)
Video Compression		H.265: Main, H.264: Main/Baseline/High,MJPEG
Smart Codec		Manual, WiseStream II
Bitrate Control		H.265/H.264: CBR or VBR, MJPEG: VBR
Streaming	Unicast	Up to 20 users
	Multicast	Support
	Multiple Streaming	Up to 10 profiles
Protocol		IPv4, IPv6, TCP/IP, UDP/IP, RTP(UDP), RTP(TCP), RTCP, RTSP, NTP, HTTP, HTTPS, SSL/TLS, DHCP, FTP, SMTP, ICMP, IGMPv2, SNMPv1/v2c/v3(MIB-2), ARP, DNS, DDNS, QoS, UPnP, Bonjour, LLDP, SRTP(TCP, UDP Unicast), PIM-SM
Application Programming Interface	ONVIF	S, G, T
	Others	SUNAPI(HTTP API), Hanwha Vision Open Platform

© Hanwha Vision CO., LTD. All rights reserved.

Security

OS / Firmware Protect	Encrypted firmware, Secure boot, Signed firmware
User authentication	Digest authentication, Prevent brute-force attack
Network authentication	IEEE 802.1X(EAP-TLS, EAP-LEAP, EAP-PEAP, MSCHAPv2)
Secure Communication	HTTPS, WSS(WebSocket Secure)
Access Control	IP-based access control
Data Protect	Encryption credentials, Encrypt compress for live recording file export
Audit	Access / System / Event Log management
Device ID	Device certificate(Hanwha Vision Root CA)
Secure Storage	TPM(Trusted platform module)
Security Certificate	TPM 2.0 with FIPS 140-2 level2

General

Memory	RAM	2GB
	Flash	256MB
Edge Storage	Micro SD/SDHC/SDXC	1slot (32GB card preinstalled)

Environmental & Electrical

Operating Condition	Temperature	-40°C~+55°C(-40°F~+131°F)
	Humidity	0~95% RH(non-condensing)
	Others	Start up should be done at above -40°C
Storage Condition	Temperature	-50°C~+60°C(-58°F~+140°F)
	Humidity	0~95% RH(non-condensing)
Input Voltage		PoE++(IEEE802.3bt type3, Class6), 12VDC
Power Consumption	PoE	Max. 50W, typical 27W
	12VDC	Max. 47.5W, typical 25W

Mechanical

Color	White
Material	Aluminum
RAL Code	RAL9003
Product Dimensions	186.9(W)x 259.3(H)x293.7(D)mm(7.32x10.2x11.56")
Product Weight	4,762g(10.5 lb)

Certifications & Standards

Environment	IEC 60529 IP66, IEC 62262 IK10, NEMA 250 type 4X, NEMA TS 2-2013 (2.2.8, 2.2.9)

Wisenet Road AI LPR/ANPR/MMCR

Solution	Highways
Speed Description	High Speed

Design and specifications are subject to change without notice. The latest product information / specification can be found at HanwhaVision.com
Hanwha Vision is formerly known as Hanwha Techwin.

© Hanwha Vision CO., LTD. All rights reserved.

Wisenet Road AI LPR/ANPR/MMCR

Lane Coverage	Up to 2 lanes
Speed Limit	Up to 200kmh(125mph) for 2 lanes
Min. Forward Distance	27m(90ft)
Max. Forward Distance	46m(150ft)
Max. Horizontal Angle	15°
Max. Vertical Angle	15°
Horizontal Offset	Up to 4m(12ft)
Camera Height	Up to 7m(24ft)
Vehicle Recognition	Make : 70+ Model : 600+ Color : 11 colors
Available Countries	Albania, Armenia, Austria, Belarus, Belgium, Bosnia and Herzegovina, Bulgaria, Cyprus, Czechia, Denmark, Estonia, Finland, France, Greece, Germany, Hungary, Ireland, Iceland, Italy, Lithuania, Luxembourg, Latvia, Montenegro, North Macedonia, Malta, Netherlands, Norway, Poland, Portugal, Romania, Serbia, Slovenia, Slovakia, Spain, Switzerland, Turkey, United Kingdom, United States of America, Canada, Russian Federation, Azerbaijan, Uzbekistan, Ukraine, Kyrgyzstan, Kazakhstan, Tajikistan, Georgia, Turkmenistan, UAE, Liechtenstein, Mexico, Moldova, Monaco, San Marino, Sweden

** NOTE: For US version, lane coverage is up to 1 lane and speed limit is up to 100mph

Design and specifications are subject to change without notice. The latest product information / specification can be found at HanwhaVision.com
Hanwha Vision is formerly known as Hanwha Techwin.

© Hanwha Vision CO., LTD. All rights reserved.

TNO-7180RLP

High-speed License Plate Capture Camera



CAD

Unit: mm [inch]

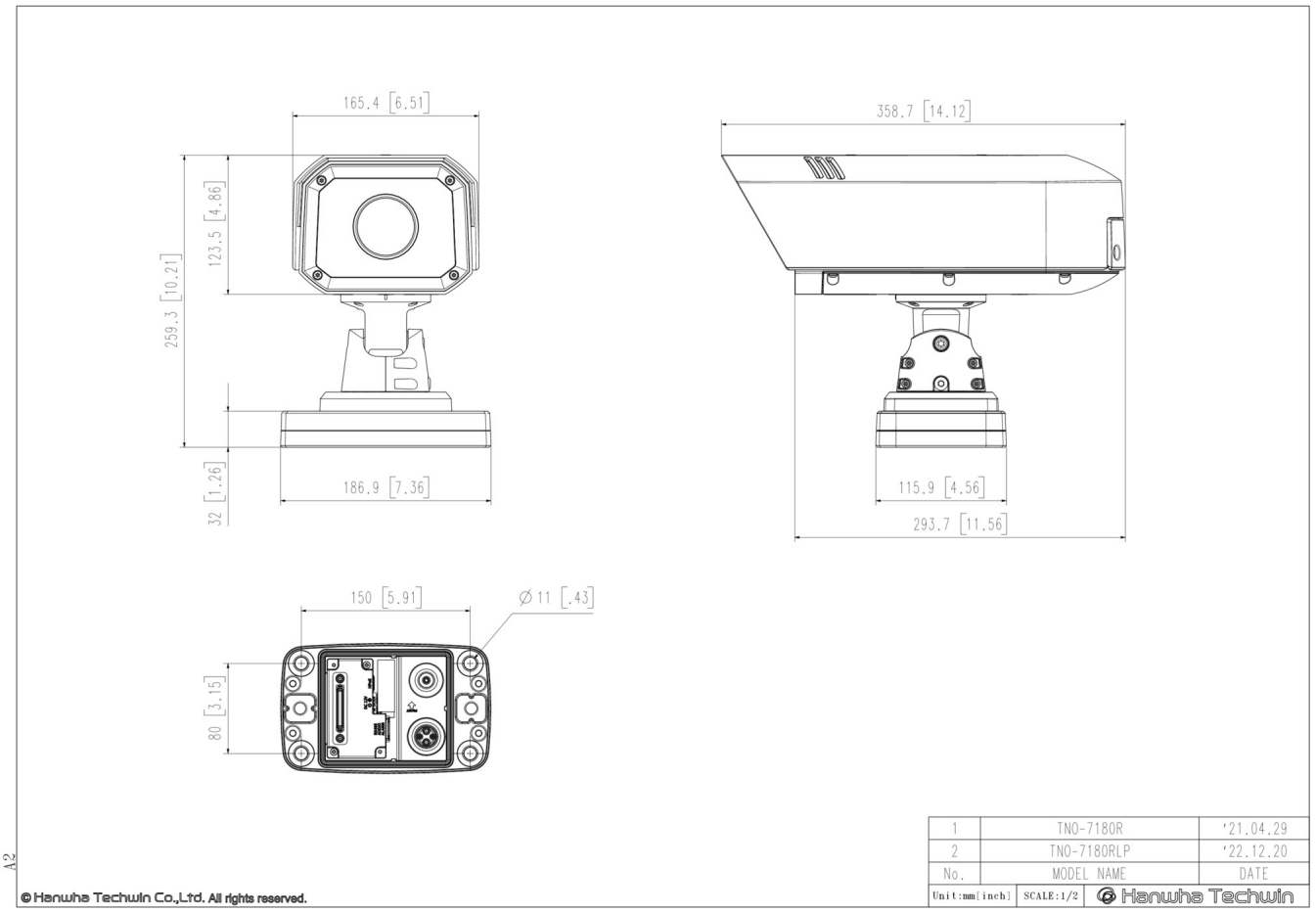

Design and specifications are subject to change without notice. The latest product information / specification can be found at HanwhaVision.com
Hanwha Vision is formerly known as Hanwha Techwin.

© Hanwha Vision CO., LTD. All rights reserved.