Hanwha Vision

Network Bullet

TNO-A45080R

Ultra High Resolution 45MP T AI Camera

Key Features

- 45MP Image Resolution
- 12~51mm Focal Length
- 4.2x Optical Zoom
- AI Analytics Person and Vehicle Detection
- Compact & Lightweight (13.8" × 4.7", 8.93 lbs)
- Dual Model Lineup (TNO-A45080R: 12-51mm, TNO-A45090R: 50-150mm)
- Low Ligiht Performance with 1/1.4" Sensor
- IR Distance Up to 200m
- Flexible Power & Connectivity Options(PoE+, PoE, 12V DC, SFP)
- Multi-View (1 Original + Up to 4 ROI Channels)

Design and specifications are subject to change without notice. The latest product information / specification can be found at HanwhaVision.com
Hanwha Vision is formerly known as Hanwha Techwin.

© Hanwha Vision CO., LTD. All rights reserved.

TNO-A45080R

Ultra High Resolution 45MP T AI Camera

Specifications

Video

Imaging Device	Size	Diagonal 23.1mm 1.4"
	Type	CMOS
Resolution Mode	45MP	8192x5552, 7792x5280, 7392x5008, 6752x4576, 5936x4024, 4512x3056, 4096x2776, 3456x2344, 2880x1952, 2240x1520, 1440x976, 1216x824, 800x544, 640x436
	8K	7680x4320, 7424x4176, 7680x3840, 6400x4800, 6144x3456, 5120x2880, 4096x3072, 3840x2160, 3200x2400, 3328x1872, 2688x1512, 2560x1440, 1920x1080, 1600x1200, 640x480
	Virtual Channel (Supports 1 to 4 Channels)	3840x2160, 3328x1872, 3200x2400, 2688x1512, 2560x1440, 1920x1080,1600x1200
Max. Framerate	H.265/H.264	15fps@45MP(45MP mode) / 25fps@33MP(8K mode)
	MJPEG	25fps/1fps@45MP(45MP mode) / 1fps@33MP(8K mode)
Min. Illumination (Lux)	Color(1/30sec, 30IRE)	0.08
	BW(1/30sec, 30IRE)	0.008
Video Out		USB: USB Type C. Preview and installation ONLY. Requires WiFi dongle.

Lens

Focal Length (mm)		12-51mm
Zoom Ratio	Optical	4.2
Max Aperture Ratio (F number)	Wide	1.6
	Tele	3.8
Angular Field of View	Horizontal	89.6°(Wide)~21.1°(Tele)
	Vertical	61.1°(Wide)~14.2°(Tele)
	Diagonal	107.3°(Wide)~25.4°(Tele)
Min. Object Distance		1.8m(Wide)~2.2m(Tele)
Focus Control		Simple focus
Lens Type		P iris(IR corrected)

Pan / Tilt / Rotate

Pan / Tilt / Rotate Range	Pan	0°~350°
	Tilt	0~90°
	Rotate	0°~350°

Design and specifications are subject to change without notice. The latest product information / specification can be found at HanwhaVision.com
Hanwha Vision is formerly known as Hanwha Techwin.

© Hanwha Vision CO., LTD. All rights reserved.

Operational

Day & Night		Auto(ICR)
Backlight Compensation		BLC, SSDR
Digital Noise Reduction		WiseNR II (Based on AI engine), SSNR V
Digital Image Stabilization		Support
Defog		Support
Motion Detection	Quantity	8ea
	Shape	8point Polygonal zones
Privacy Masking	Quantity	4ea
	Shape	Polygonal zones
	Color / Option	Gray, Green, Red, Blue, Black, White, Mosaic
Gain Control		Low, Middle, High, Off
White Balance		ATW, AWC, Manual, Indoor, Outdoor
LDC		Support
Electronic Shutter	Mode	Minimum, Maximum, Anti flicker, Prefer shutter control(Based on AI engine)
	Speed Range	1/5~1/12,000sec
Digital PTZ		Support
Video Rotation		Flip, Mirror, Hallway view(90°/270°)
Alarm Interface	In/Out	2 configurable I/O ports
	Others	Support extra alarm I/O via optional I/O box
Alarm Triggers		Analytics, Network disconnect, Alarm input, Time schedule, MQTT subscription, Case tampering, Day/Night, Storage disruption
Alarm Events When Alarm Trigger Occurred		File upload(image): e-mail/FTP/SFTP, File upload(video clip): FTP/SFTP, Notification: e-mail, Recording: SD/SDHC/SDXC or NAS recording at event triggers,Alarm output, Handover: PTZ preset,send message by HTTP/HTTPS/TCP,Audio clip playback, MQTT: publication
Audio In		Selectable(mic in/line in)
Audio Out		Line out
Light Type		IR LED
Light Viewable Length	IR	80m(262.5ft)
IR Wavelength		850nm

Analytics

Classified Object Type		Person, Face, Vehicle, License plate
Attributes	Person	Upper/Lower clothes color, Gender, Bag
	Vehicle	Type(car, bus, truck, motorcycle, bicycle), Color
	Face	Age, Gender, Face mask, Glasses
Thumbnail		BestShot

Design and specifications are subject to change without notice. The latest product information / specification can be found at HanwhaVision.com
Hanwha Vision is formerly known as Hanwha Techwin.

© Hanwha Vision CO., LTD. All rights reserved.

Analytics

Analytics Events	Based on AI Engine	Object detection, Virtual line(Crossing/Direction), Motion detection, Virtual area(Loitering/Intrusion/Enter/Exit/Appear/Disappear)
	Normal	Defocus detection, Tampering, Audio detection, Shock detection
Business Intelligence	Based on AI Engine	People counting, Queue management, Heatmap, Vehicle counting, Crowd counting

Network

Ethernet		Metal shielded RJ-45(10/100/1000BASE-T), SFP
Video Compression		H.265: Main, H.264: Main/High,MJPEG
Audio Compression		G.711(PCM): 8kHz(64kbps), G.726(ADPCM): 8kHz(16/24/32/40kbps), AAC-LC: 16kHz(48kbps), OPUS: 16kHz(64kbps)
Smart Codec		Manual, WiseStream(Based on AI engine)
Bitrate Control		H.265/H.264: CBR or VBR, MJPEG: VBR
Streaming	Unicast	Up to 20 users
	Multicast	Support
	Multiple Streaming	Up to 3 profiles
Protocol		IPv4, IPv6, TCP/IP, UDP/IP, RTP(UDP), RTP(TCP), RTCP, RTSP, NTP, HTTP, HTTPS, SSL/TLS, DHCP, FTP, SFTP, SMTP, ICMP, IGMPv2, SNMPv1/v2c/v3(MIB-2), ARP, DNS, DDNS, QoS, UPnP, Bonjour, LLDP, CDP, SRTP(TCP, UDP Unicast), MQTT, Syslog
Application Programming Interface	ONVIF	S, G, T, M
	Others	SUNAPI(HTTP API), Hanwha Vision Open Platform

Security

OS / Firmware Protect	Encrypted firmware, Secure boot, Signed firmware
User authentication	Digest authentication, Prevent brute-force attack
Network authentication	IEEE 802.1X(EAP-TLS, EAP-LEAP, EAP-PEAP, MSCHAPv2)
Secure Communication	HTTPS, WSS(WebSocket Secure), SRTP
Access Control	IP-based access control, MAC-based access control, Auto logout
Data Protect	Encryption credentials, Encrypt compress for live recording file export
Audit	Access / System / Event Log management
Device ID	Device certificate(Hanwha Vision Root CA)
Secure Storage	TPM(Trusted platform module), SDcard partition encrypt(AES-256), Secure element
Supply Chain Security	SBOM
Security Certificate	Secure element(FIPS 140-3 level3, CC EAL6+), Consumer IoT Security Standard (ETSI EN 303 645)

General

Memory	RAM	8GB
	Flash	16GB eMMC

Design and specifications are subject to change without notice. The latest product information / specification can be found at HanwhaVision.com
Hanwha Vision is formerly known as Hanwha Techwin.

© Hanwha Vision CO., LTD. All rights reserved.

General

Edge Storage	Micro SD/SDHC/SDXC	Max. 1TB x 2slot(Total 2TB)

Environmental & Electrical

Operating Condition	Temperature	-40°C~+55°C(-40°F~+131°F)
	Humidity	0~100% RH(condensing)
	Others	Humidity control with AIR vent
Storage Condition	Temperature	-50°C~+60°C(-58°F~+140°F)
	Humidity	0~95% RH(non-condensing)
Input Voltage		PoE+(IEEE802.3at, Class4), PoE++(IEEE802.3bt type3, Class6), 12VDC
Power Consumption	PoE	PoE++: Max. 39.4W, typical 19.0W PoE+: Max. 23.4W,typical 19.0W
	12VDC	Max. 37.3W, typical 18.4W
WisePower		Power mode

Mechanical

Color	White, Black
Material	Aluminum, Plastic
RAL Code	RAL9003
Product Dimensions	120x120x350mm(4.72"x4.72"x13.78")
Product Weight	4050g(8.93lb)
Compatible Gang Box	Single, Double, 4" Octagon, Square

Certifications & Standards

EMC	FCC 47 CFR 15 Subpart B Class A,CE/UKCA - EN55032 Class A,EN 50130-4,EN 61000-3-2,EN 61000-3-3,KS C 9832 Class A,KS C 9835,IC Regulation ICES-003 Issue 7 Class A,FCC - IC Regulation ICES 003 Issue 7, RCM - EN IEC 63000:2018 Class A, VCCI - EN IEC 63000:2018 Class A
Safety	UL 62368-1, CAN/CSA C22.2 NO. 62368-1, IEC 62471
Environment	IEC/EN 63000, IEC 60529 IP66, IEC 60529 IP67, IEC 62262 IK10, NEMA 250 type 4X, IEC 60068-2-1, IEC 60068-2-2, IEC 60068-2-6, IEC 60068-2-14, IEC 60068-2-27, IEC 60068-2-78

AI Detection Distance

Person(1.8m/5.9ft)	Wide	Up to 67.8m(222.4ft)
	Tele	Up to 321.1m(1053.5ft)
Vehicle(1.45m/4.8ft)	Wide	Up to 87.7m(287.7ft)
	Tele	Up to 415.8m(1364.2ft)

DORI (EN62676-4 standard)

Detect (25PPM/ 8PPF)	Wide	165.0m(541.30ft)
	Tele	879.7m(2886.21ft)

Design and specifications are subject to change without notice. The latest product information / specification can be found at HanwhaVision.com
Hanwha Vision is formerly known as Hanwha Techwin.

© Hanwha Vision CO., LTD. All rights reserved.

DORI (EN62676-4 standard)

Observe (63PPM/ 19PPF)	Wide	66.0m(216.52ft)
	Tele	351.9m(1154.48ft)
Recognize (125PPM/ 38PPF)	Wide	33.0m(108.26ft)
	Tele	175.9m(577.24ft)
Identify (250PPM/ 76PPF)	Wide	16.5m(54.13ft)
	Tele	88.0m(288.62ft)

Design and specifications are subject to change without notice. The latest product information / specification can be found at HanwhaVision.com
Hanwha Vision is formerly known as Hanwha Techwin.

© Hanwha Vision CO., LTD. All rights reserved.

TNO-A45080R

Ultra High Resolution 45MP T AI Camera

CAD

Unit: mm [inch]

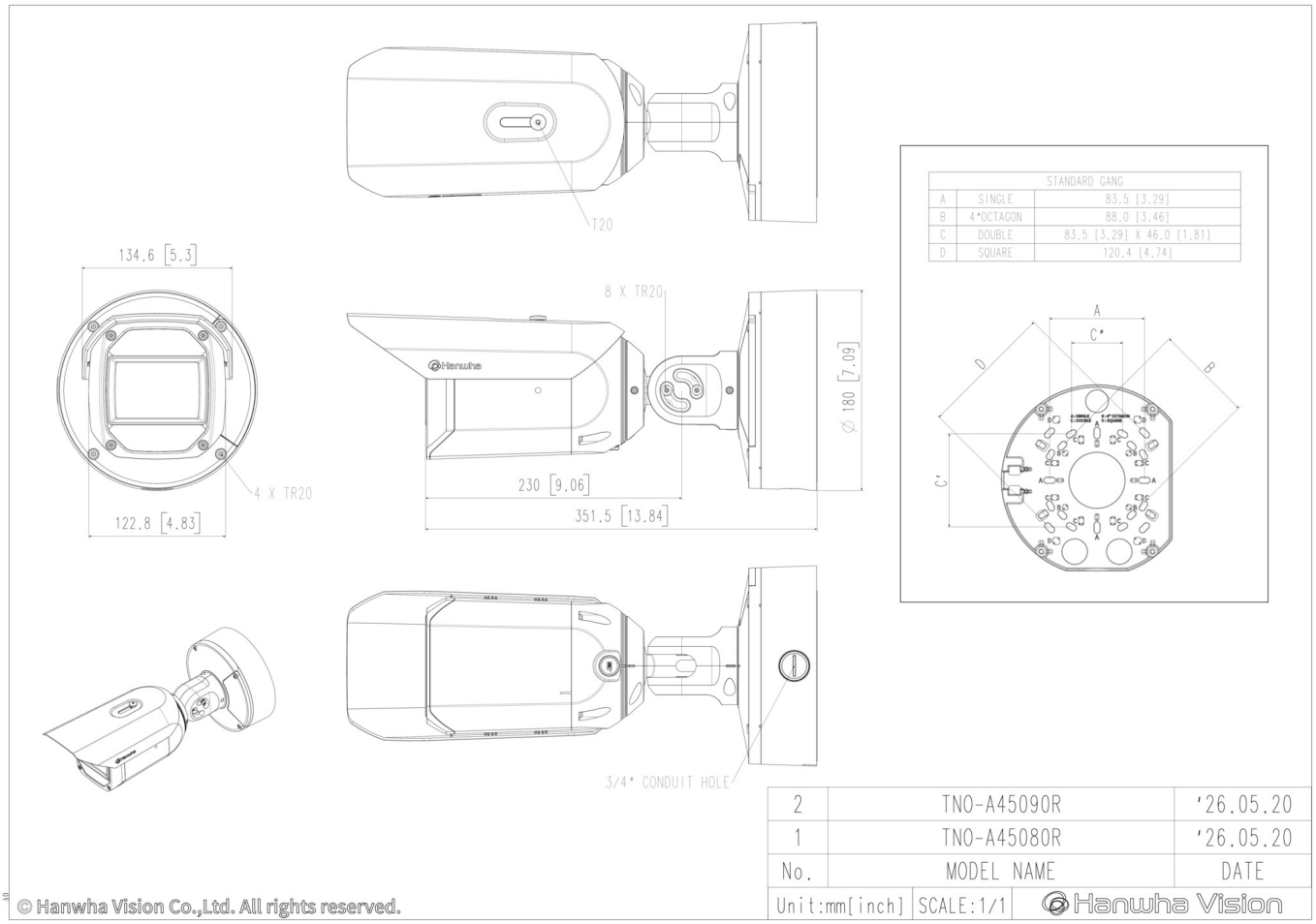

Design and specifications are subject to change without notice. The latest product information / specification can be found at HanwhaVision.com
Hanwha Vision is formerly known as Hanwha Techwin.

© Hanwha Vision CO., LTD. All rights reserved.

Compatible Devices

SBP-300CMTS

SBP-140CMB

SBP-180CMB

SBP-180CMS

SBP-150CMP

SBP-300CMP

SBP-900CMP

SBP-C15H

SBP-C15NP

SBP-C35H

SBP-C15P

SBP-150CMI

SBP-150NBW

SBP-150PMW

SBP-150S

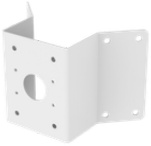
SBP-156KMW

SBP-115PFA

SBP-050NBW

SBP-060S

SBP-300CMI

SBP-300CMTW

SBP-300CMW1

SBP-900CMW

SBP-250WMW

SBP-400WMW

SBD-180PMW

SBP-350WMW

SBP-200WMW

SPM-4210

SBP-180HMW1

Design and specifications are subject to change without notice. The latest product information / specification can be found at HanwhaVision.com
Hanwha Vision is formerly known as Hanwha Techwin.

© Hanwha Vision CO., LTD. All rights reserved.