Hanwha Vision

NETWORK CAMERA

User Manual

TNO-A45080R
TNO-A45090R

CE

Network Camera
User Manual

Copyright

©2026 Hanwha Vision Co., Ltd. All rights reserved.

Trademark

Each of trademarks herein is registered. The name of this product and other trademarks mentioned in this manual are the registered trademark of their respective company.

Restriction

Copyright of this document is reserved. Under no circumstances, this document shall be reproduced, distributed or changed, partially or wholly, without formal authorization.

Disclaimer

Hanwha Vision makes the best to verify the integrity and correctness of the contents in this document, but no formal guarantee shall be provided. Use of this document and the subsequent results shall be entirely on the user's own responsibility. Hanwha Vision reserves the right to change the contents of this document without prior notice.

※ **Design and specifications are subject to change without prior notice.**

※ **The initial administrator ID is "admin" and the password should be set when logging in for the first time.**
Please change your password every three months to safely protect personal information and to prevent the damage of the information theft.
Please, take note that it's a user's responsibility for the security and any other problems caused by mismanaging a password.

IMPORTANT SAFETY INSTRUCTIONS

1. Read these instructions.
2. Keep these instructions.
3. Heed all warnings.
4. Follow all instructions.
5. Do not use this apparatus near water.
6. Clean the contaminated area on the product surface with a soft, dry cloth or a damp cloth.
   (Do not use a detergent or cosmetic products that contain alcohol, solvents or surfactants or oil constituents as they may deform or cause damage to the product.)
7. Do not block any ventilation openings, Install in accordance with the manufacturer's instructions.
8. Do not install near any heat sources such as radiators, heat registers, stoves, or other apparatus (including amplifiers) that produce heat.
9. Do not defeat the safety purpose of the polarized or grounding-type plug. A polarized plug has two blades with one wider than the other. A grounding type plug has two blades and a third grounding prong. The wide blade or the third prong are provided for your safety. If the provided plug does not fit into your outlet, consult an electrician for replacement of the obsolete outlet.
10. Protect the power cord from being walked on or pinched particularly at plugs, convenience receptacles, and the point where they exit from the apparatus.
11. Only use attachments/ accessories specified by the manufacturer.
12. Use only with the cart, stand, tripod, bracket, or table specified by the manufacturer, or sold with the apparatus. When a cart is used, use caution when moving the cart/ apparatus combination to avoid injury from tip-over.

13. Unplug this apparatus during lighting storms or when unused for long periods of time.
14. Refer all servicing to qualified service personnel. Servicing is required when the apparatus has been damaged in any way, such as power-supply cord or plug is damaged, liquid has been spilled or objects have fallen into the apparatus, the apparatus has been exposed to rain or moisture, does not operate normally, or has been dropped.
15. This product is intended to be supplied by a UL Listed Power Supply Unit marked "Class 2"or"LPS"or"PS2" and rated from 12 Vdc, 3.11 A or PoE(55 Vdc), 0.72 A
16. This product is intended to be supplied by isolation power.
17. If you use excessive force when installing the product, the camera may be damaged and malfunction.
    If you forcibly install the product using non-compliant tools, the product may be damaged.
18. Do not install the product in a place where chemical substances or oil mist exists or may be generated. As edible oils such as soybean oil may damage or warp the product, do not install the product in the kitchen or near the kitchen table.
    This may cause damage to the product.
19. When installing the product, be careful not to allow the surface of the product to be stained with chemical substance.
    Some chemical solvents such as cleaner or adhesives may cause serious damage to the product's surface.
20. If you install/disassemble the product in a manner that has not been recommended, the production functions/ performance may not be guaranteed.
    Install the product by referring to "Installation & connection" in the user manual.
21. Installing or using the product in water can cause serious damage to the product.
22. This device has been verified using STP cable. The use of appropriate GND grounding and STP cable is recommended to effectively protect your product and property from transient voltage, thunderstroke, communication interruption.
23. The operating temperature of the product is -40°C ~ +55°C (-40°F ~ +131°F).
24. Be sure to keep power off before installation, and apply power (DC or PoE) after camera installation is complete. Installation on power applied may cause damage to the camera.

WARNING

TO REDUCE THE RISK OF FIRE OR ELECTRIC SHOCK, DO NOT EXPOSE THIS PRODUCT TO RAIN OR MOISTURE. DO NOT INSERT ANY METALLIC OBJECT THROUGH THE VENTILATION GRILLS OR OTHER OPENINGS ON THE EQUIPMENT.

Apparatus shall not be exposed to dripping or splashing and that no objects filled with liquids, such as vases, shall be placed on the apparatus.

To prevent injury, this apparatus must be securely attached to the Wall/ceiling in accordance with the installation instructions.

CAUTION

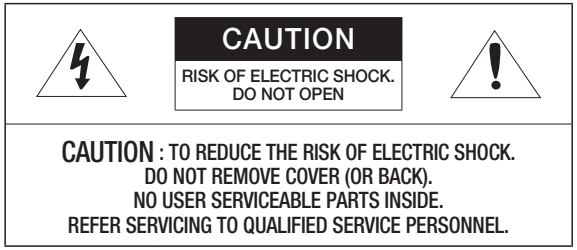

EXPLANATION OF GRAPHICAL SYMBOLS

The lightning flash with arrowhead symbol, within an equilateral triangle, is intended to alert the user to the presence of "dangerous voltage" within the product's enclosure that may be of sufficient magnitude to constitute a risk of electric shock to persons.

The exclamation point within an equilateral triangle is intended to alert the user to the presence of important operating and maintenance (servicing) instructions in the literature accompanying the product.

Class I construction

An apparatus with CLASS I construction shall be connected to a MAINS socket outlet with a protective earthing connection.

Battery

Batteries(battery pack or batteries installed) shall not be exposed to excessive heat such as sunshine, fire or the like.

The battery cannot be replaced.

Prohibition of battery abuse

- Do not install and use the wrong type of battery.
- Do not leave the battery in a mechanically crush or cut it because it can explode.
- Do not leave the battery in a high temperature environment.
- Do not leave the battery in a low-pressure environment.

Disconnection Device

Disconnect the main plug from the apparatus, if it's defected. And please call a repair man in your location.

When used outside of the U.S., it may be used HAR code with fittings of an approved agency is employed.

CAUTION

RISK OF EXPLOSION IF BATTERY IS REPLACED BY AN INCORRECT TYPE.
DISPOSE OF USED BATTERIES ACCORDING TO THE INSTRUCTIONS.

ATTENTION

IL Y A RISQUE D'EXPLOSION SI LA BATTERIE EST REMPLACÉE PAR UNE BATTERIE DE TYPE INCORRECT.
METTRE AU REBUT LES BATTERIES USAGÉES CONFORMÉMENT AUX INSTRUCTIONS.

CAUTION

These servicing instructions are for use by qualified service personnel only.
To reduce the risk of electric shock do not perform any servicing other than that contained in the operating instructions unless you are qualified to do so.

Please use the input power with just one camera and other devices must not be connected.

The USB-C port on the product is intended for initial setup only and should not be used for any other purpose.

Before connecting the Power Terminal Block, you need to unplug the power plug from the outlet first.

This equipment is not suitable for use in locations where children are likely to be present.

When a new product box is opened (or during the initial use of the product), moisture might build up on the glass of the camera. The built-up moisture disappears naturally within a few hours after powered on.

Do not arbitrarily loosen or tighten the gore valve.

The ITE is to be connected only to PoE networks without routing to the outside plant.

The wired LAN hub providing power over the Ethernet (PoE) in accordance with IEEE 802.3bt/802.3at shall be a UL Listed device with the output evaluated as a Limited Power Source as defined in UL60950-1 or PS2 as defined in UL62368-1.

Unit is intended for installation in a Network Environment 0 as defined in IEC TR 62102. As such, associated Ethernet wiring shall be limited to inside the building.

Please read the following recommended safety precautions carefully.

- Do not place this apparatus on an uneven surface.
- Do not install on a surface where it is exposed to direct sunlight, near heating equipment or heavy cold area.
- Do not place this apparatus near conductive material.
- Do not attempt to service this apparatus yourself.
- Do not place a glass of water on the product.
- Do not install near any magnetic sources.
- Do not block any ventilation openings.
- Do not place heavy items on the product.
- Please wear protective gloves when installing/removing the camera.
  The high temperature of the product surface may cause a burn.

User's Manual is a guidance book for how to use the products.

The meaning of the symbols are shown below.

- Reference : In case of providing information for helping of product's usages
- Notice : If there's any possibility to occur any damages for the goods and human caused by not following the instruction

※ Please read this manual for the safety before using of goods and keep it in the safe place.

We do not guarantee the quality of third-party products (e.g. lenses, accessories) that you separately purchase.

In particular installation environments, there might be interference in radio communications. When interference of electromagnetic waves occurs between the product and radio communication device, it is recommended to keep a certain distance between the two or change the direction of the receiving antenna.

WARNING

To Prevent damage which may caused by IR LED, don't stare at operating lamp.
For below models only.

TNO-A45090R / TNO-A45080R

CONTENTS

OVERVIEW 3

3 Important Safety Instructions
6 Recommended PC Specifications
6 Recommended Micro SD/SDHC/SDXC Memory Card Specifications
6 NAS recommended specs
7 Optional Accessories for Installation

INSTALLATION & CONNECTION 8

8 What's Included
8 At a Glance
9 Installation
17 Connecting with other Device

NETWORK CONNECTION AND SETUP 22

22 Connecting the Camera Directly to Local Area Networking
22 Connecting the Camera Directly to a DHCP Based DSL/Cable Modem
23 Using ConfigPro
23 Starting a server
23 Automatically searching camera
23 Configuring IP address
25 Manually registering camera
25 Automatically configuring IP
25 Port Range Forward (Port Mapping) Setup
26 Connecting to the Camera from a Shared Local PC
26 Connecting to the Camera from a Remote PC via the Internet

WEB VIEWER 27

27 Connecting to the Camera
28 Password setting
28 Login
28 Camera Web Viewer Setup

APPENDIX 29

29 Troubleshooting

RECOMMENDED PC SPECIFICATIONS

- CPU : Intel(R) Core(TM) i7 3.4 GHz or higher
- RAM : 8G or higher
- Recommended browser: Chrome
- Supported browsers: Chrome, Safari, Firefox, MS Edge(chromium based)
- Supported OS : Windows, Mac, Linux, Android, iOS, Chrome
- Verification environment
  - Windows 10: Chrome Latest version, Firefox Latest version, MS Edge Latest version
  - Mac latest version and version being supported
    ref.) https://en.wikipedia.org/wiki/MacOS

※ The video play performance of the web viewer depends on the performance of the user's CPU and GPU.

RECOMMENDED MICRO SD/SDHC/SDXC MEMORY CARD SPECIFICATIONS

- Hanwha Vision Memory Card : SPP-E128G, SPP-E256G, SPP-E512G, SPP-E10T
- Recommended capacity : 16 GB ~ 1 TB(MLC type recommended)
- Recommended Manufacturers / Product Type :
  - SanDisk / High Endurance, MAX ENDURANCE
  - Western Digital / Purple QD101
  - Transcend / High Endurance
- TNO-A45080R/TNO-A45090R supports a total of four multiple profiles.
  When all four profiles are used, additional recording profiles such as SD card cannot be set and used.

- Micro SD card can support up to 2 TB if two slots are used. Each slot supports up to 1 TB, and one slot cannot support 2 TB by itself.

NAS RECOMMENDED SPECS

- Recommended capacity : 200GB or higher is recommended.
- For this camera, you are recommended to use a NAS with the following manufacturer's specs.
  Recommended products : QNAP NAS, Synology NAS

- While using the NAS auto recording, if you reboot your camera, the N/W connection may be deferred and the behavior of NAS auto recording might fail depending on the attributes of your external N/W devices.

OPTIONAL ACCESSORIES FOR INSTALLATION

You can purchase appropriate optional accessories available.

Model name	Pole Mount	Corner Mount
TNO-A45080R TNO-A45090R	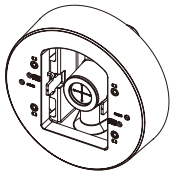 SBD-180PMW	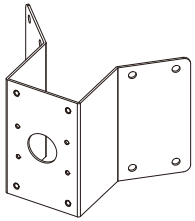 SBP-300KMW1

WHAT'S INCLUDED

Accessories may vary by country/region.

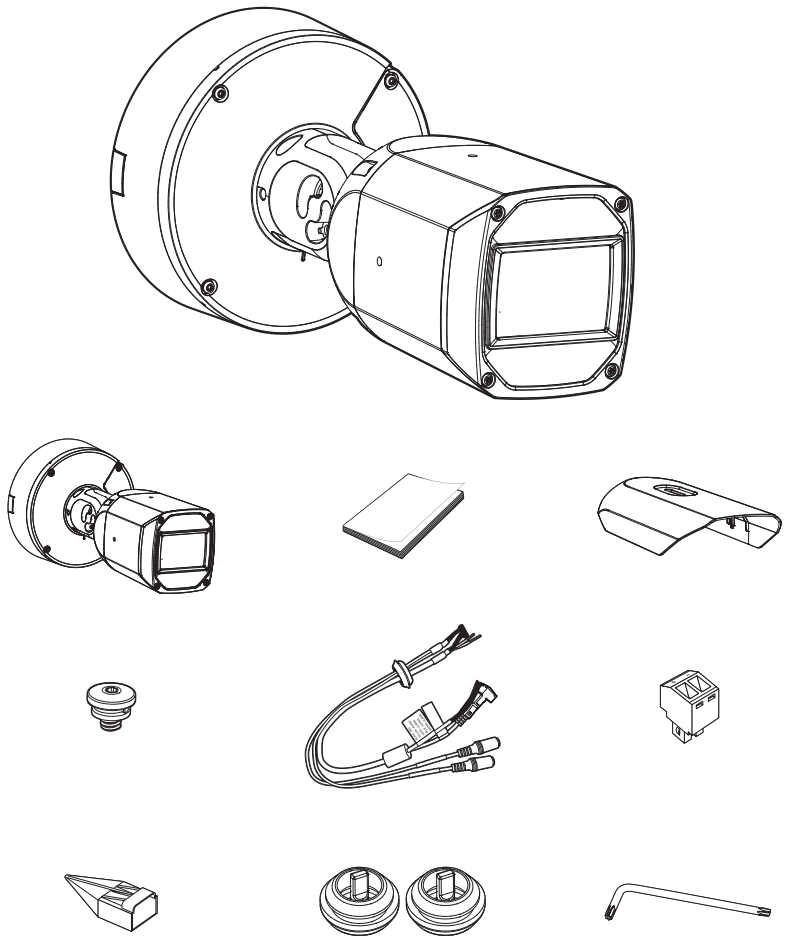

- The shape of the camera lens may differ based on the model number.
- Use installation screws of at least M4, L30 for the installation of this product.

AT A GLANCE

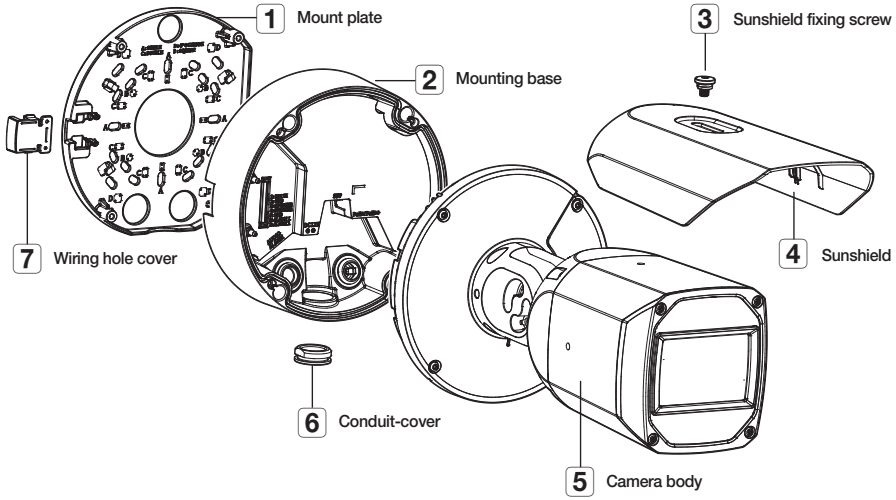

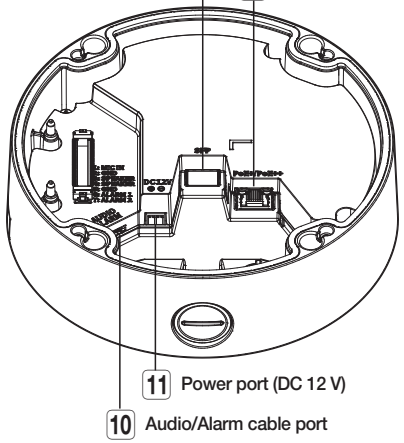

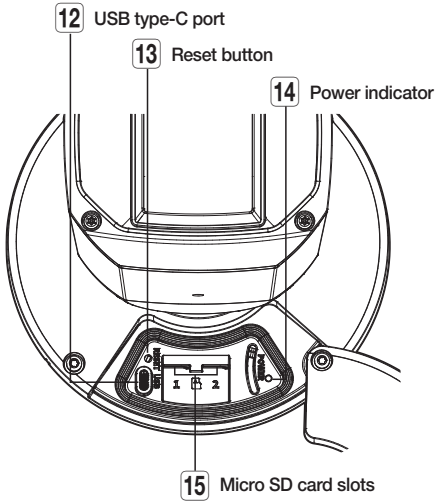

- Wipe out a dirty surface of the lens softly with a lens tissue or cloth to which you have applied ethanol.

INSTALLATION

- The camera jack connected to the external cable is not waterproof. You are recommended to install this product below the edge of eaves to prevent the cable from being externally exposed.

Precautions before installation

Ensure you read out the following instructions before installing the camera:

- Ensure the power source is disconnected before beginning. Connect the power supply (DC or PoE) only after the camera installation is complete. Applying power during installation may damage the camera.
- Select an installation site that can hold at least 5 times the camera's weight.
- Ensure all cables are routed safely. Avoid pinching or peeling the cable insulation, as damaged wiring can cause a short circuit, product failure, or fire.
- Clear the installation area of all unauthorized personnel and personal items prior to beginning work to ensure a safe environment
- Applying excessive force during installation can damage internal components and cause the camera to malfunction. Always use compliant, correctly sized tools; forcing assembly with improper tools may permanently damage the product.
- Do not use the sunshield hole for any purpose other than for connecting the sunshield.

Removal

1. Remove the mounting base by turning the mounting base's fastening screws on the camera body counterclockwise.
   - Note that it is not necessary to loosen the screws completely.

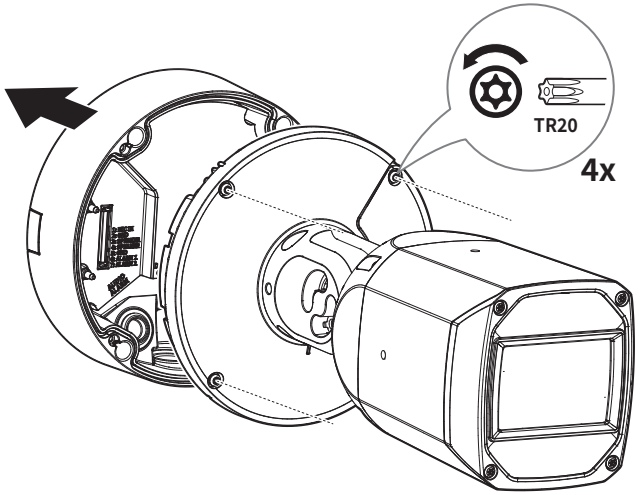

2. Detach the mount plate by loosening the fastening screw on the mounting base counterclockwise.
   - Note that it is not necessary to loosen the screws completely.

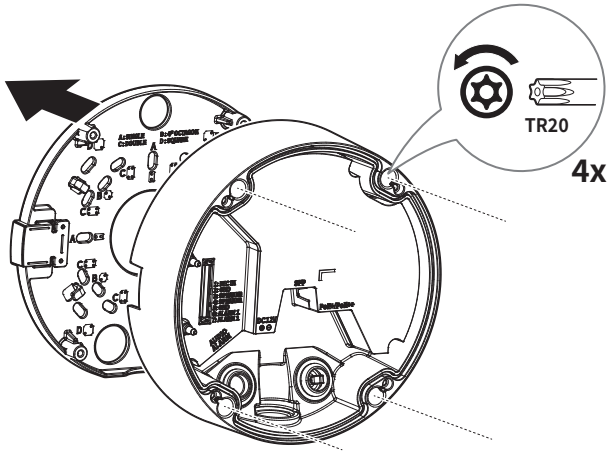

Inserting a Micro SD card

1. Using the supplied Torx tool or an equivalent driver, remove the screw from the MicroSD card slot cover, then slide or pull the cover aside.
2. Insert a Micro SD card in the arrow direction shown in the figure.

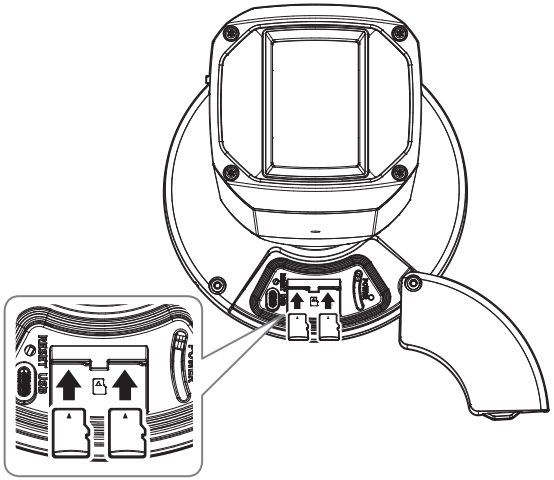

3. Replace the micro SD card slot cover, and then tighten the screw to assemble it.

- Before installing the camera, the Micro SD card should be inserted while the power source and the body are separated.
- Do not forcefully insert it in the reverse direction. It might damage your Micro SD card and your product.
- When it rains or the humidity is high, insertion or ejection of a Micro SD card is not recommended.
- Always service the MicroSD card on a flat, level work surface. This minimizes the risk of dropping the device or losing small hardware components during handling.
- Make sure the SD card clicks into place and is secured when pushed all the way in.
  If the SD card is not completely inserted, it may not be recognized properly.

Removing a Micro SD card

Gently press down on the exposed end of the Micro SD card as shown in the diagram to eject the Micro SD card from the slot.

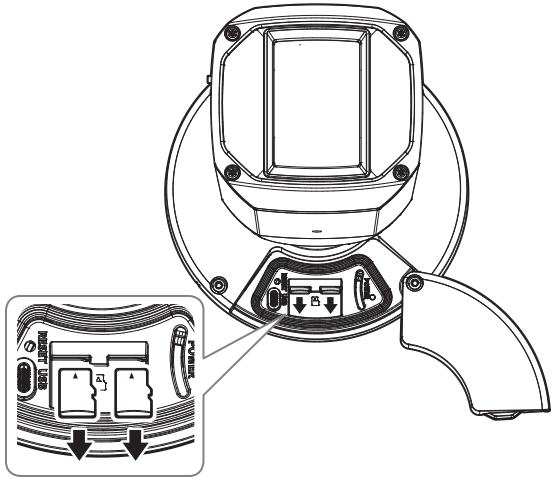

- Before removing the Micro SD card, in <**Setup** (⚙)>-<**Event**>-<**Storage**>, set the device to <**Off**> and press the [**Apply**] button and turn the camera off.
- If you turn off the camera or remove the Micro SD card that contains data from the product, the data may be lost or damaged.

Installation (Mount plate)

[Installing directly on wall/ceiling]

1. Position the mounting plate at the installation site, aligning it with the desired field of view. Mark the positions for the mounting screws and the cable pass-through hole, then drill the holes.

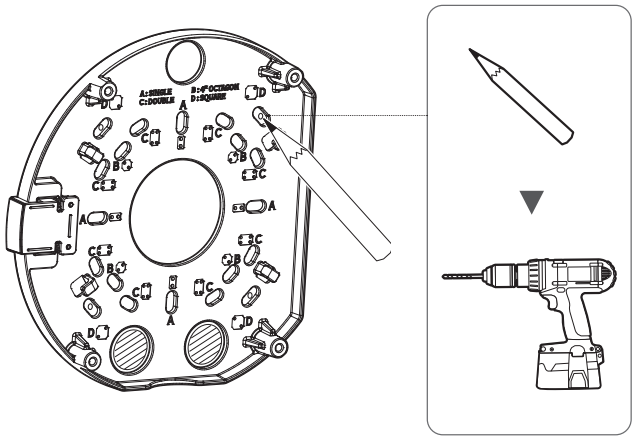

2. Affix the Mount plate using appropriate screws.

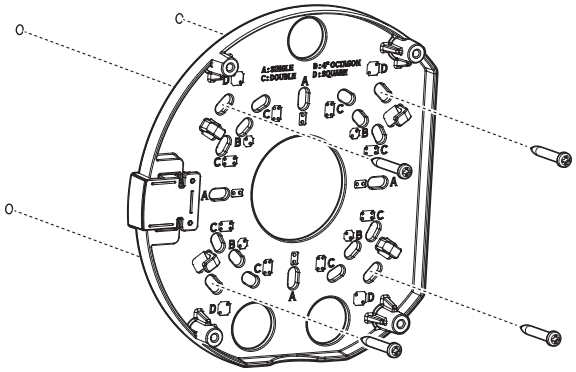

- When connecting the cable through the side, remove the wiring hole cover first before doing so.

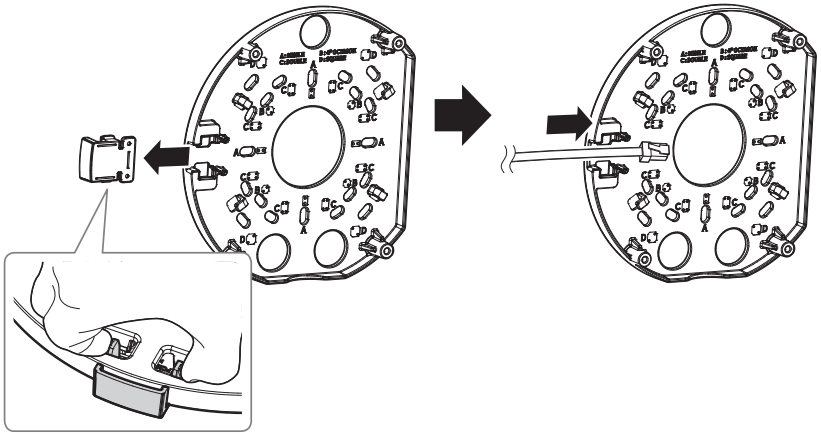

3. Pull out necessary cables among network/power/audio/alarm cables through the hole in the Mount plate.

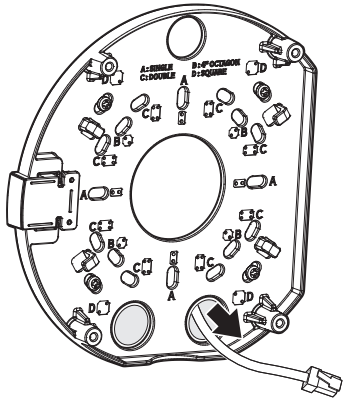

(When installing by connecting conduit)

4-1. Use a coin or a flathead screwdriver to remove the conduit cover on the mounting base.

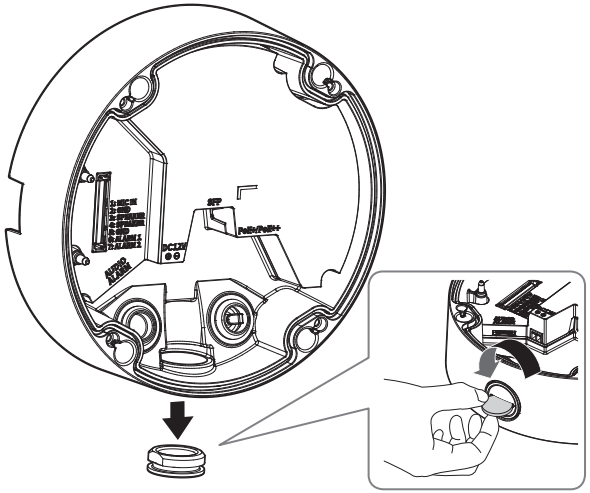

4-2. Mount the conduit to the conduit adaptor.

4-3. Route the required network, power, audio, and alarm cables through the conduit.

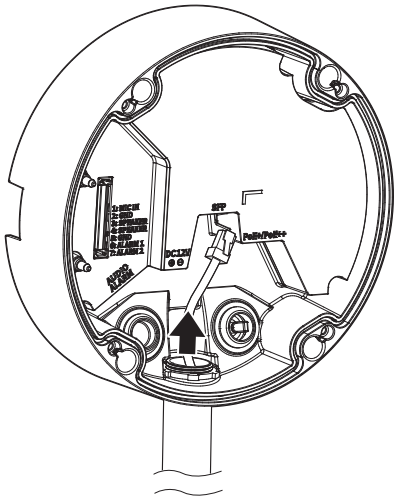

Installation (Mounting base)

- Use a cable bushing compliant with the network cable to be connected.
  - Camera main: use a cable with the diameter of Ø5 to 6.5
- You can only use a network cable with a diameter of Ø6.5 or less.

[Installing the network cable]

1. Remove the cable bushing from the mounting base.

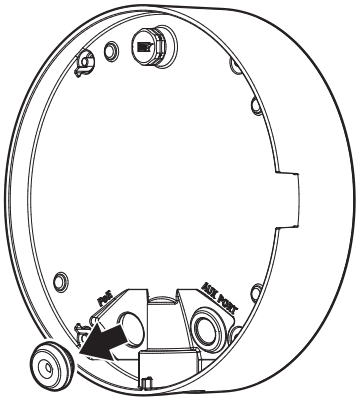

2. Pull off the extruded part of the 1-hole cable bushing provided.

3. Use the cap installer to pass through the RJ45 cable.

Cap Installer

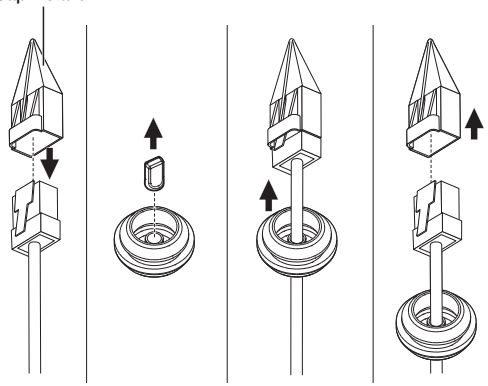

4. For waterproof protection, pull down the cable below the cable bushing as shown in the figure below.

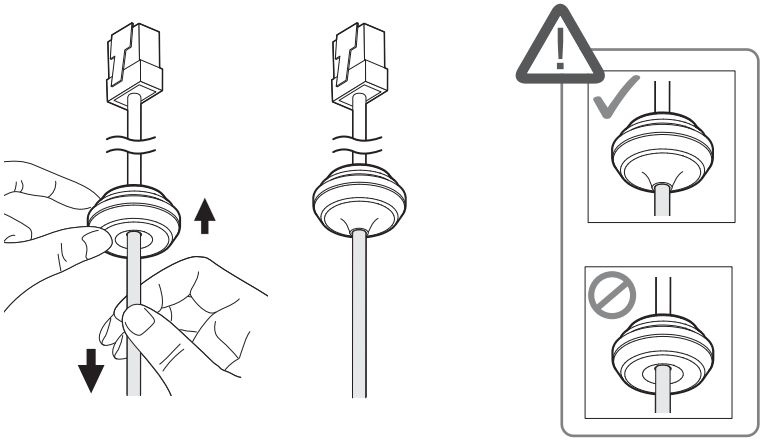

5. Mount the cable bushing to the mounting base.

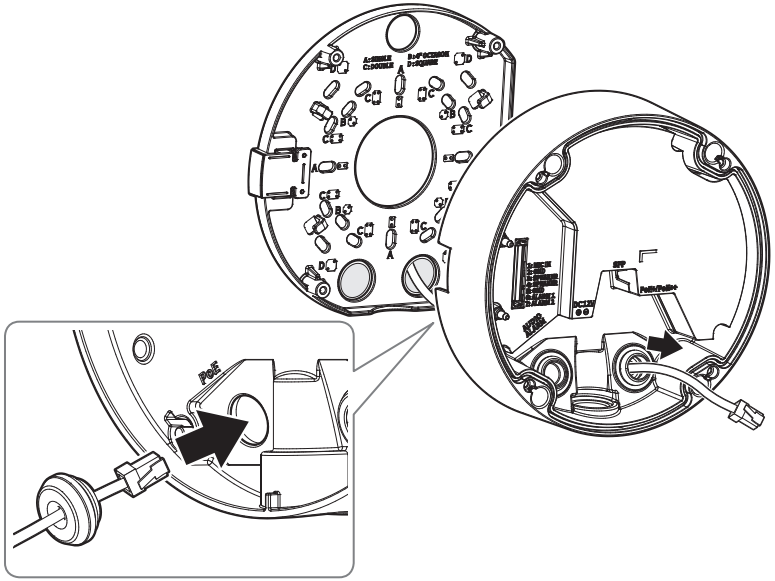

[Installation of the power(DC 12V)/audio/alarm cable]

1. Remove the cable bushing from the mounting base.

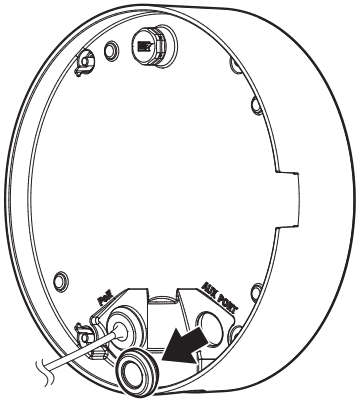

2. Connect the cable bushings of the provided power/audio/alarm cables to the lower part of the mounting base, as shown in the figure.

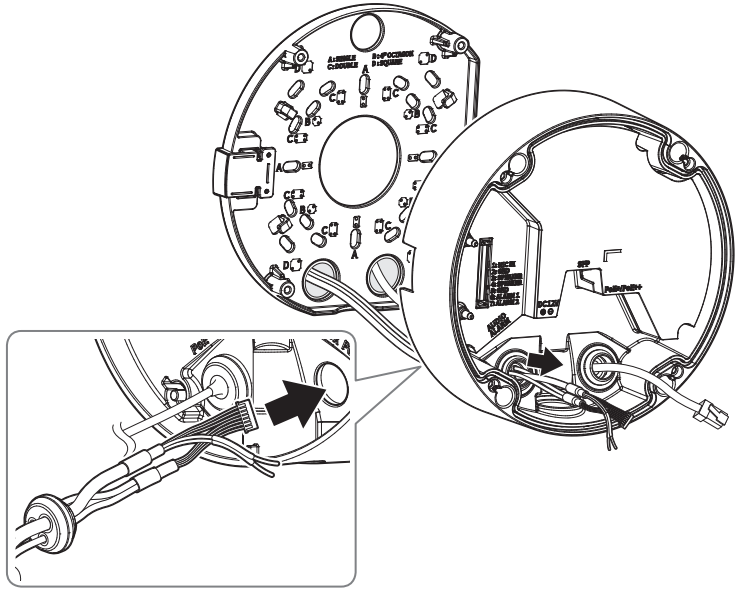

(When connecting DC 12V Power cables)

1. Connect the provided power terminal block to the power cables.

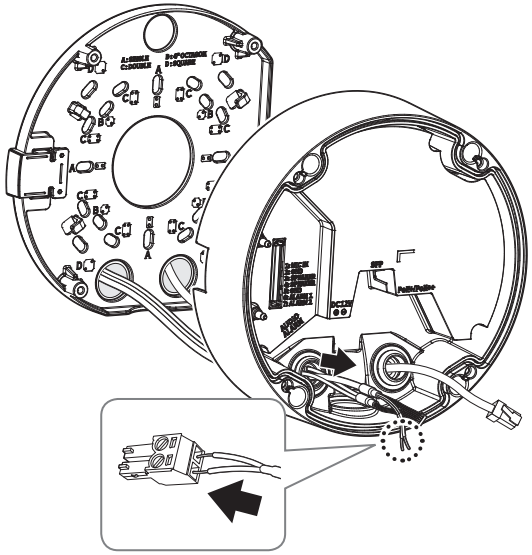

- Connect the power cable to the power terminal block paying attention to the polarity markings on the connector.

Installing the camera body

1. Connect the network/power/audio/alarm cables to the terminal on the mounting base.

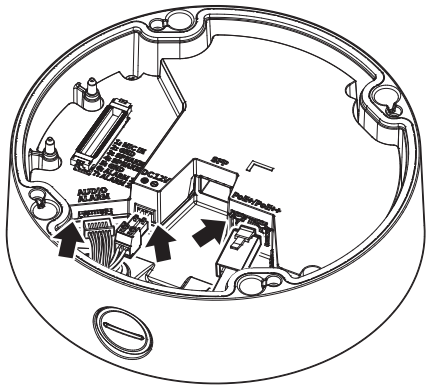

2. Join the camera body with the mounting base.

- Make sure to firmly tighten the fastening screws so that there is no water damage issue.

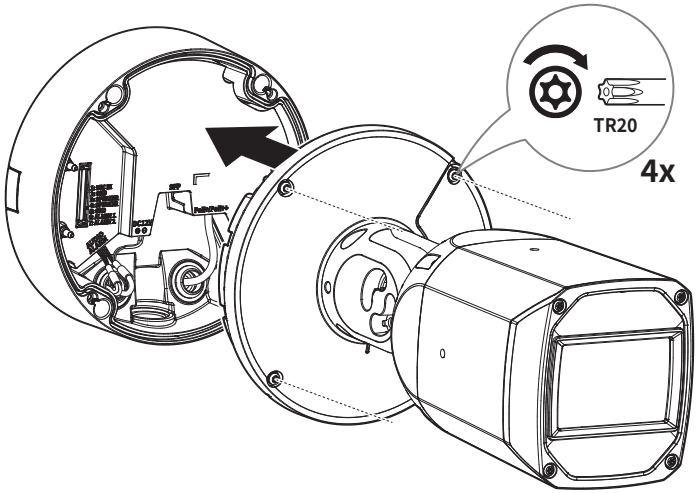

3. Adjust the lens to the desired direction with reference to "**Adjusting the monitoring direction for the camera**" section. (page 15)
   - Connect a monitoring device to the USB port and then monitor and adjust it. (page 18)

Adjusting the monitoring direction for the camera

- When adjusting the camera monitoring direction, loosen the corresponding adjustment screws, adjust the camera, and then tighten the screws. Forcibly adjusting the camera while the screws are fastened may cause scratches and malfunction.
- Connect a monitoring device to the USB type-C port and then monitor and adjust it.

[Tilt]

1. Loosen the tilt adjustment screws on both sides of the camera body and adjust the tilt direction.
   - Note that it is not necessary to loosen the screws completely.

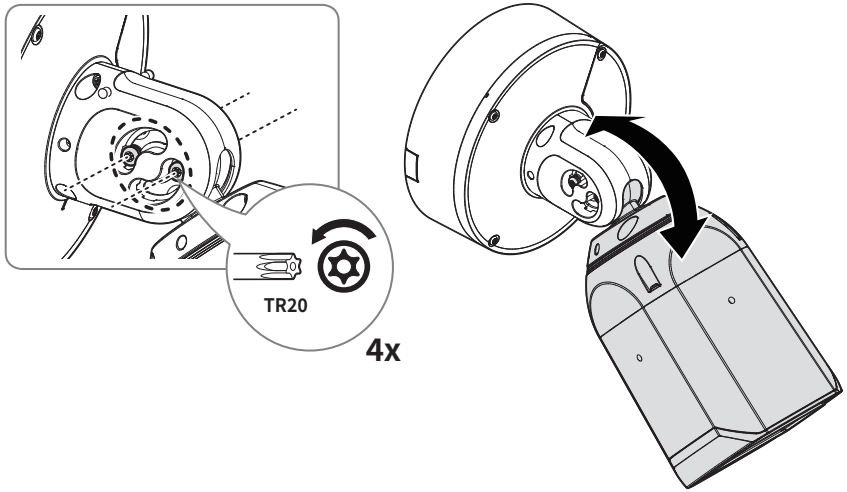

2. When adjusting the tilt direction is complete, re-fasten the tilt adjustment screws to secure the tilt angle.

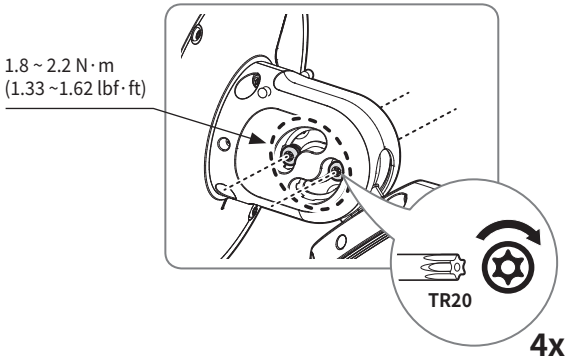

[Pan]

1. Loosen the pan adjustment screws on both sides of the camera body and adjust the pan direction.
   - Note that it is not necessary to loosen the screws completely.

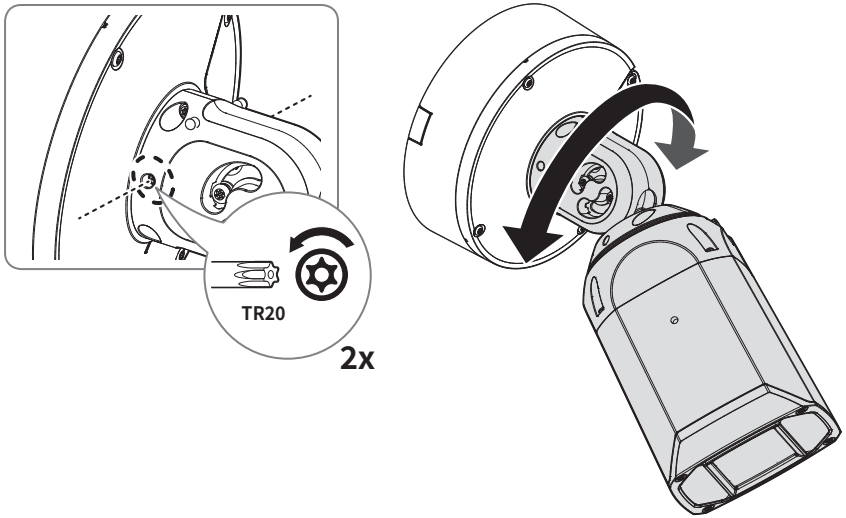

2. When adjusting the pan direction is complete, re-fasten the pan adjustment screws to secure the pan angle.

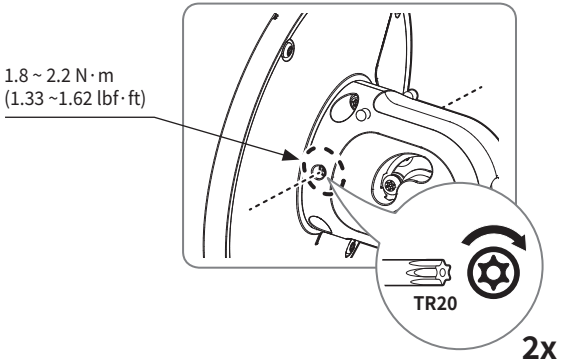

[Lens Rotation]

1. Loosen the lens rotation adjustment screws on both sides of the camera body and adjust the lens rotation angle.
   - Note that it is not necessary to loosen the screws completely.

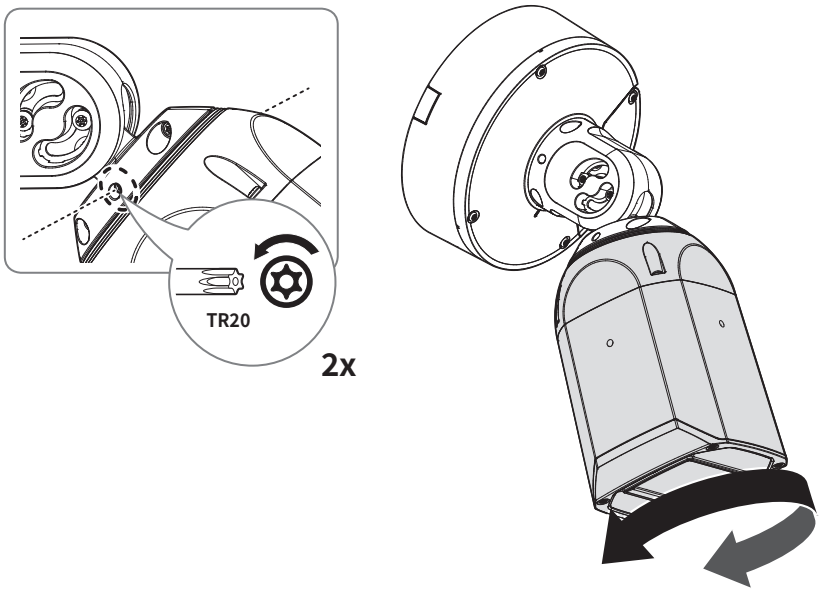

2. When adjusting the lens rotation is complete, re-fasten the lens rotation adjustment screws to secure the angle.

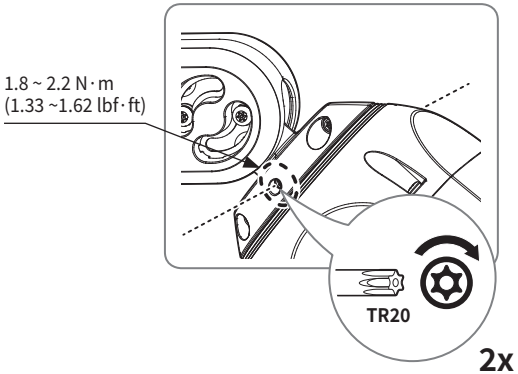

3. Use the sunshield mounting screws and tooth washers to join the sunshield to the camera body.

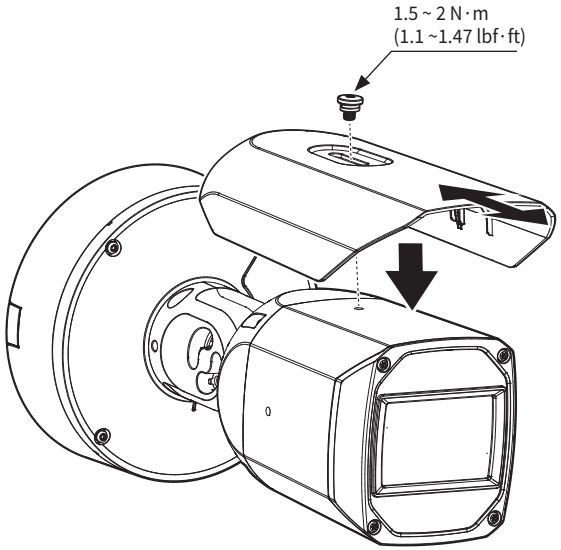

Waterproofing of cable connections

When installing the camera outdoors, wrap all external cable connections with waterproof butyl rubber tape (commercially available) to prevent moisture ingress through the cable gaps.

1. Connect the power, I/O, and network cables, etc.
2. Wrap the black cable jacket (Area A) and the cable connection area with waterproof (butyl rubber) tape so that more than half of the butyl rubber tape is overlapped.

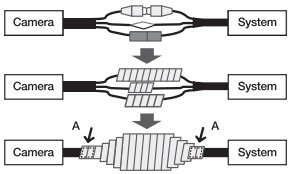

- If the cable jacket is not waterproofed properly, then it can directly cause leakage. Make sure to protect the cable with a dense layer of tape.
- Waterproof butyl tape is made of butyl rubber that can be stretched to twice its normal length.

CONNECTING WITH OTHER DEVICE

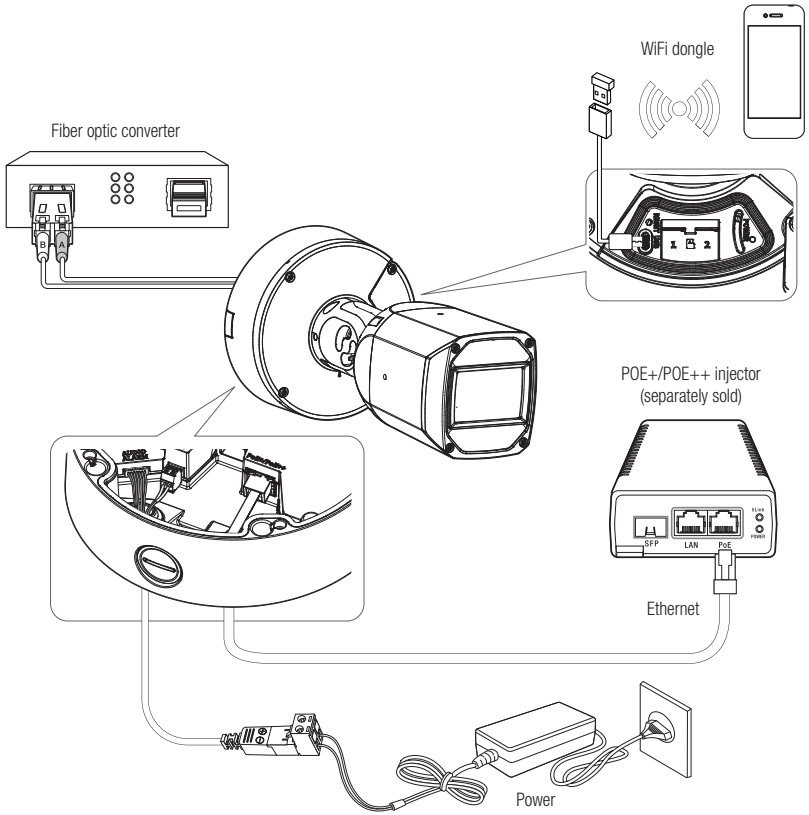

- The product USB Type-C ports are used to communicate with the application installed in the smartphone by connecting the WiFi dongle.
  The USB Type-C port is intended solely for installation purposes and should not be used during product operation.

Connecting WiFi

Camera Setup

1. Connect the OTG gender (Type C) and WiFi dongle to the USB Type-C port.

Smartphone Setup

1. Install the Wisenet Installation application.
2. Select the camera SSID after turning on the WiFi.
3. Run the Wisenet Installation application.
4. When you log in to the camera, the video will be connected.
5. You can adjust angle of view while watching the video through smartphone.

Recommended dongle manufacturer

Manufacturer	Model
NETIS	WF2123 n300
EDIMAX	EW-7811Un V2 (New ver.)
IP Time	N100mini
IP Time	N150L
TP-LINK	TL-WN823N V1
TP-LINK	TL-WN725N
ASUS	USB-N13
ASUS	USB-N10 NANO
NETGEAR	WNA3100M
IODATA	WN-G150UMW
IODATA	WN-S150UM
TOTOLINK	N300UM

Connecting the SFP module

1. Insert the SFP module.

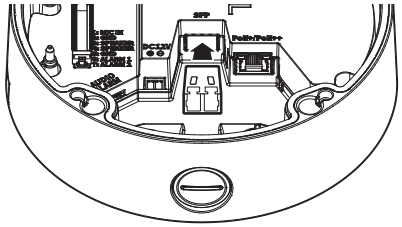

2. Connect the LC-type fiber optic cable (AB) to the SFP module.

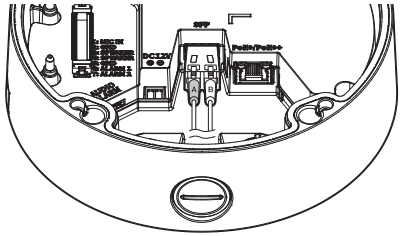

3. Connect the opposite end of the fiber optic cable (BA) to the media converter paired with the SFP module.

- Use a cable gland compatible with a P3/4" PF tap.
- SFP module, optical cable, cable gland, and optic converter are purchased separately.
- Only use optical modules that are UL-listed and comply with the Class 1 laser product requirements of IEC 60825-1 in the SFP ports of this device.
- SFP modules of the following manufacturers are recommended :
  - Comnet, IFS, Skylane, AVAGO, CISCO
- Connect the SFP module and fiber optic converter by cross-connecting the optical cable (AB/BA).

- The connection of the SFP module must be made after the connected camera is turned off.
- Do not install/remove the SFP module while the camera is on.
- A kink in the optical cable may disrupt the connection for communication.
- Do not directly look at the optical cable. It can damage your eyes.

Ethernet Connection

Connect the camera to your local network or the internet using either an Ethernet cable (RJ-45) or an SFP fiber optic link. This device supports link redundancy between the RJ-45 and SFP interfaces, with the SFP connection taking priority.

Example of Failover Behavior:

- SFP Connection Established: If an SFP link is detected while the RJ-45 port is active, the system automatically switches to the SFP link and deactivates the RJ-45 connection.
- SFP Connection Lost: If the active SFP link drops, the system automatically switches back to the RJ-45 connection to maintain network uptime.

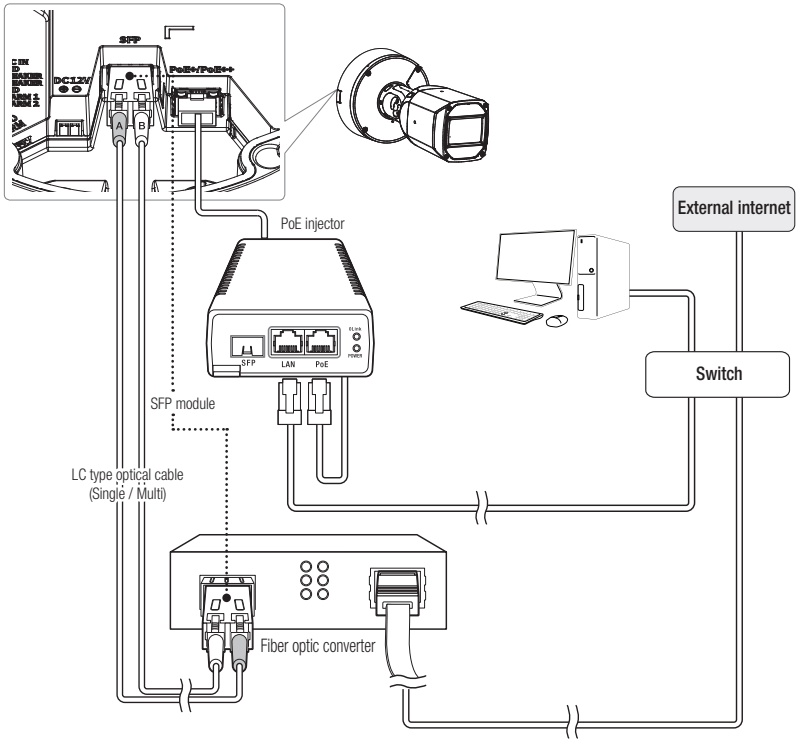

Optical communication ethernet standard

Item	Contents
Ethernet : Optical communication	SFP (LC Type)
Optical communication : Ethernet physical tier	10/100/1000BASE-T
Optical communication : Default speed	100/1000Mbps
Optical communication : Ethernet standard	IEEE 802.3ab, IEEE 802.3z

Powering and networking

Connect the PoE+/PoE++ device with the PoE+/PoE++ terminal of the camera.

- Connect and use a PoE+/PoE++ enabled router.
- Use a PoE+/PoE++ device that complies with the IEEE802.3at/802.3bt(PSE TYPE 2/TYPE 3) standard.
- If you connect using an PoE+/PoE++-enabled router, you don't need a separate power supply cable to power it on.

Network Cable Specification

Item	Contents	Remark
Connector	RJ45 (10/100/1000BASE-T)	
Ethernet	10/100/1000BASE-T	To operate with 1000BASE-T, a cable of Category 6 or higher should be used for the Giga hub.
Cable	Category 6	
Max Distance	100 m	DC Resistance ≤ 0.125 Ω/m
PoE Support	PoE+/PoE++	

- Use an STP cable to increase the protection from thunderstroke damage.

Power Supply

Use a screwdriver to connect the + and - lines of the power adaptor to the provided power terminal block, and then insert them in the power port (DC12V).

- If both PoE and 12 VDC power sources are connected simultaneously, the camera will draw power from both inputs.
  - It is strongly recommended to use only a single power source (either PoE or 12 VDC) to power the device.
- The use of the adapter of DC 12 V, 3.2 A or higher is recommended.
- The use of the PoE++ injector is recommended for the device power.
- Be careful not to reverse the polarity when you connect the power cable.
- If you want to connect an external device, you must turn off the external device before proceeding.
- Connect the product using correctly-grounded STP cable.
- Before plugging the power plug into a power socket, connect the power cable of the camera and adaptor first.

Power Cable Specification

In case of DC 12 V Input:

Wire Type (AWG)	#12	#14	#16
Cable Length (Max.)	27 m	17 m	10 m

Connecting to Audio Input/Output

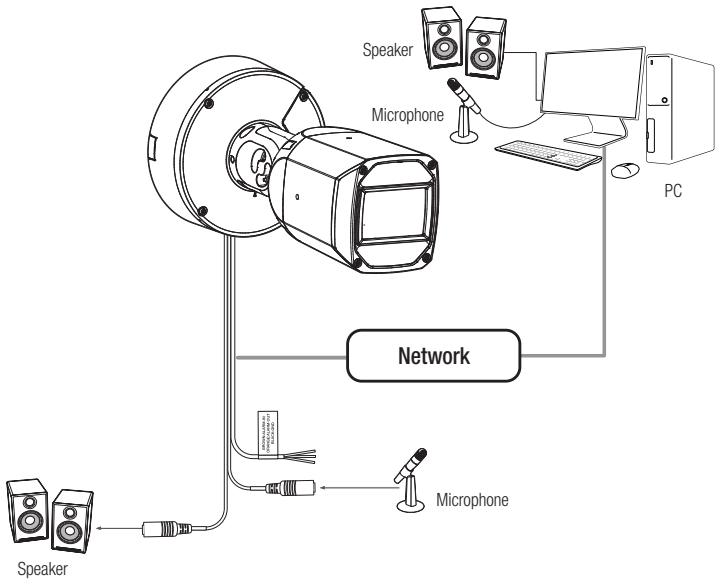

1. Connect the MIC port of the camera with the microphone or LINE OUT port of the amplifier that the microphone is connected to.
2. Connect the SPEAKER port of the camera with the speaker or LINE IN port of the amplifier that the speaker is connected to.
3. Check the specifications for audio input.

- **Audio Codec**
  - Audio In : G.711(PCM): 8kHz(64kbps), G.726(ADPCM): 8kHz(16/24/32/40kbps), AAC-LC: 16kHz(48kbps), OPUS: 16kHz(64kbps)
- **Full duplex Audio**
- **Audio in** :
  - Supported voltage : 3.3VDC
  - Input impedance : 20KΩ
- **Audio out** :
  - Output voltage : <2.74Vpp
  - Load Resistance : 10KΩ

- In the case you access the web viewer and select an external microphone as the audio input sources in <**Video & Audio**> - <**Audio setup**>, the following specifications are recommended:
  - Frequency range: 40-16,000 Hz
  - Impedance: 1,500 Ω
  - Sensitivity: -40±3 dB (7.1-14.1 mV)

Connecting to the I/O port box

Connect the Alarm I/O cable to the corresponding port of the port box.

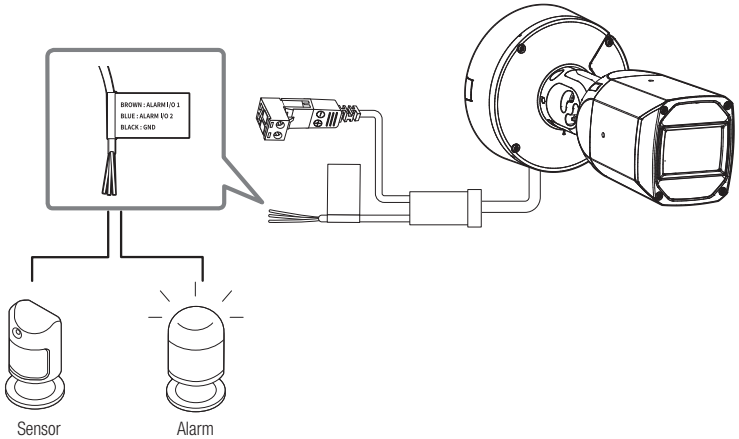

Alarm-related Connector

- Make sure to connect the provided alarm cable before use.

Color	Function	Description
BROWN : ALARM I/O 1 BLUE : ALARM I/O 2	ALARM I/O 1, ALARM I/O 2	These two ports are configurable from the web viewer, as they can be used as Alarm in or Alarm out ※ Alarm I/O changes can be made through the Webviewer setup.
BLACK	GND	It is a ground terminal.

To connect to an external sensor

To use as an Alarm IN: Connect one of the [ALARM I/O] port and the other terminal to the [GND] port.

Alarm In Wiring Diagram(example)

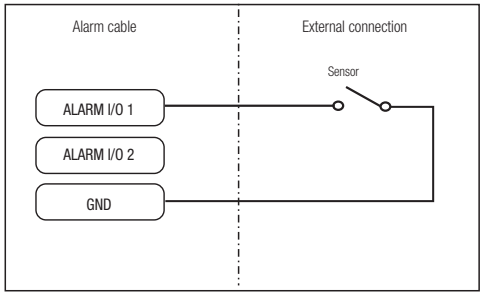

<If ALARM I/O 1 is set as an input terminal>

To connect to an alarm output

If devices (e.g., flashing light and siren) that exceed the voltage and current specifications are connected by using the open collector method, it may cause damage.

Refer to the alarm out connection diagram below case.

Use a relay with a rated voltage of 12V or less.

Connect the relay power directly to an external power source, and use the ALM_OUT terminal only for external relay control signals.

Alarm Out Wiring Diagram(example)

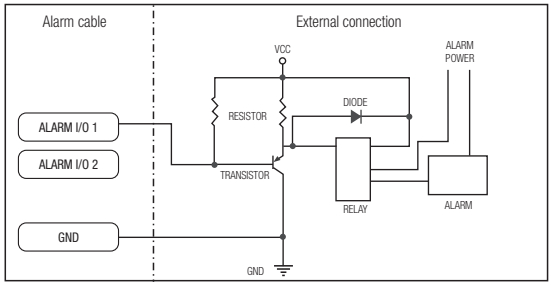

<If ALARM I/O 1 is set as an output terminal>

You can set up the network settings according to your network configurations.

CONNECTING THE CAMERA DIRECTLY TO LOCAL AREA NETWORKING

Connecting to the camera from a local PC in the LAN

1. Launch an Internet browser on the local PC.
2. Enter the IP address of the camera in the address bar of the browser.

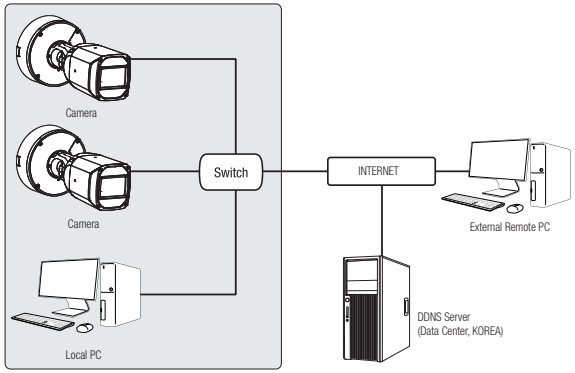

<Local Network>

- A remote PC in an external Internet out of the LAN network may not be able to connect to the camera installed in the intranet if the port-forwarding is not properly set or a firewall is set.
  In this case, to resolve the problem, contact your network administrator.
- By factory default, the IP address will be assigned from the DHCP server automatically.
  If there is no DHCP server available, the IP address will be set to 192.168.1.100.
  To change the IP address, use the ConfigPro.
  For further details on ConfigPro use, refer to "**Using ConfigPro**". (Page 23)

CONNECTING THE CAMERA DIRECTLY TO A DHCP BASED DSL/CABLE MODEM

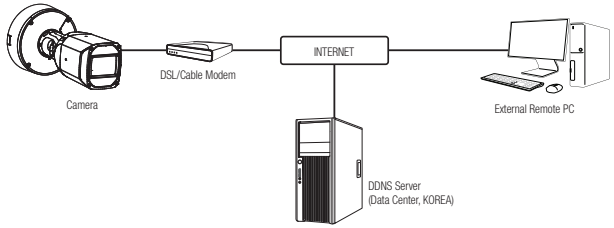

1. Connect the user PC directly with the network camera.
2. Run the ConfigPro and change the IP address of the camera so that you can use the web browser on your desktop to connect to the camera.
3. Use the Internet browser to connect to the web viewer.
4. Move to [**Setup**] page.
5. Move to [**Network**] – [**DDNS**] and configure the DDNS settings.
6. Move to [**Basic**] – [**IP & Port**], and set the IP type to [**DHCP**].
7. Connect the camera, which was removed from your PC, directly to the modem.
8. Restart the camera.

- For information on how to set DDNS, refer to the online help of Web Viewer.
- For information on how to set the IP format, refer to the online help of Web Viewer.

USING ConfigPro

- The ConfigPro software can be downloaded from the model page under <**Products**> - <**Software**> - <**Management**> on the Hanwha Vision website (https://www.HanwhaVision.com).
- For detailed instructions on using ConfigPro, refer to the <**Manuals**> menu on the page.

STARTING A SERVER

From the network server list, you can select a server where the cameras are installed and log in.

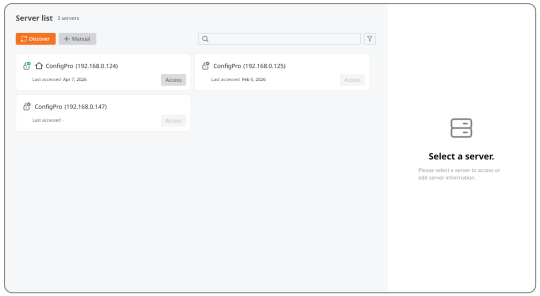

AUTOMATICALLY SEARCHING CAMERA

If the camera is connected to the same network as the server registered in ConfigPro, you can find the network camera using the search function.

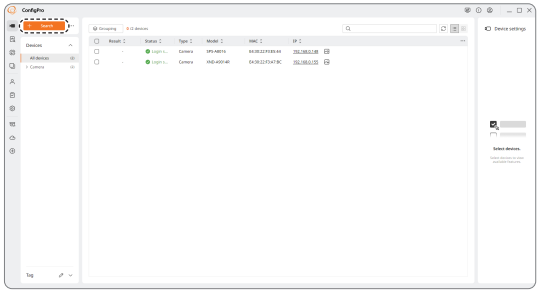

1. Click <**Search**> at the main page of ConfigPro.
2. Check the camera from the list.
   - Check MAC address at the sticker attached to the camera.

CONFIGURING IP ADDRESS

If you want to change camera network setting, <**Login success**> sign must be displayed at <**Status**>.

Configuring Static IP

Manually insert and configure IP address & port information.

When setting one camera

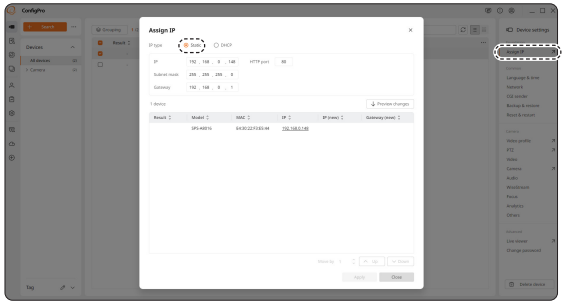

1. From the search list, select a camera to change its IP settings.
2. On the right side of the ConfigPro screen, click <**Assign IP**>.
3. Select <**Static**>.
   - IP information of the camera will be displayed as previously set.
4. Fill in IP & Port related categories.
5. Click the [**Preview changes**] button to check the IP address that will be assigned.

If not using a Broadband Router

For setting <**IP Address**>, <**Subnet Mask**>, and <**Gateway**>, contact your network administrator.

- HTTP Port : Used to access the camera using the Internet browser, defaulted to 80.
- RTSP Port: A port that controls real-time streaming. The initial value is 554.

If using a Broadband Router

- IP Address : Enter an address falling in the IP range provided by the Broadband Router.
  ex) 192.168.1.2~254, 192.168.0.2~254,
  192.168.XXX.2~254
- Subnet Mask : The <**Subnet Mask**> of the Broadband Router will be the <**Subnet Mask**> of the camera.
- Gateway : The <**Local IP Address**> of the Broadband Router will be the <**Gateway**> of the camera.

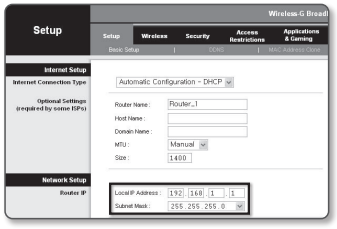

- The settings may differ depending on the connected Broadband Router model.
  For more information, refer to the user manual of the applicable router.
- For more information about port forwarding of the broadband router, refer to "**Port Range Forward (Port Mapping) Setup**". (Page 25)

If the Broadband Router has more than one camera connected

Configure the IP related settings and the Port related settings distinctly with each other.

ex)

Category		Camera #1	Camera #2
IP related settings	IP Address Subnet Mask Gateway	192.168.1.100 255.255.255.0 192.168.1.1	192.168.1.101 255.255.255.0 192.168.1.1
Port related settings	HTTP Port RTSP Port	8080 554	8081 555

- If the <**HTTP Port**> is set other than 80, you must provide the <**Port**> number in the address bar of the Internet browser before you can access the camera.
  Example: http://IP address : HTTP Port
  http://192.168.1.100:8080

6. Click [**Apply**] Button.
7. If the success message is displayed, click [**OK**].

When setting multiple cameras

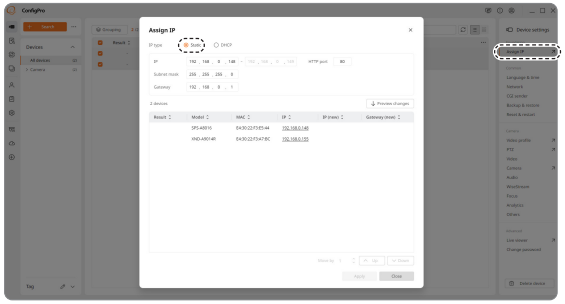

1. Click the camera from the list that you want the change the IP setting.
2. On the right side of the ConfigPro screen, click <**Assign IP**>.
3. Select <**Static**>.
4. Enter the initial address of the IP address range to be assigned.
5. Click the [**Preview changes**] button to check the IP address that will be assigned.
6. Click the [**Apply**] button to start IP assignment.
7. If the success message is displayed, click [**OK**].

Configuring Dynamic IP

Receive IP address from DHCP

- Example of the Dynamic IP environment
  - If a Broadband Router, with cameras connected, is assigned an IP address by the DHCP server
  - If connecting the camera directly to modem using the DHCP protocols
  - If IPs are assigned by the internal DHCP server via the LAN

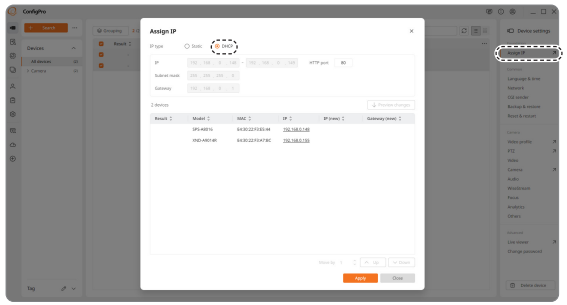

1. From the search list, select a camera to change its IP settings.
   - You can configure multiple cameras at the same time by selecting them together.
2. On the right side of the ConfigPro screen, click <**Assign IP**>.
3. Select <**DHCP**>.
4. Click the [**Apply**] button to start IP assignment.
5. Check the <**Result**> item for the success of IP assignment.

MANUALLY REGISTERING CAMERA

If the camera is not found through the search function, you can manually enter the IP information to find and register it remotely.

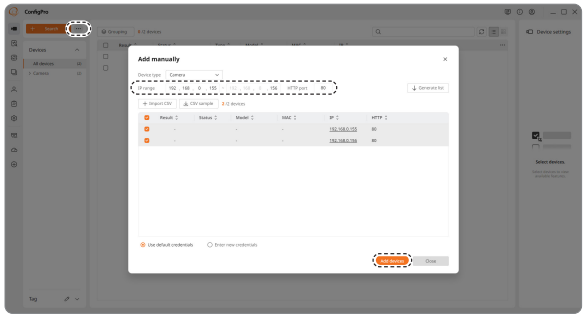

1. On the ConfigPro main screen, click the <**...**> button to the right of <**Search**>.
2. Enter the range of IP addresses to search, then click the [**Generate list**] button.
3. Select the devices to register, then click the [**Add devices**] button.
4. Check if camera is registered.
   - Check MAC address at the sticker attached to the camera.

AUTOMATICALLY CONFIGURING IP

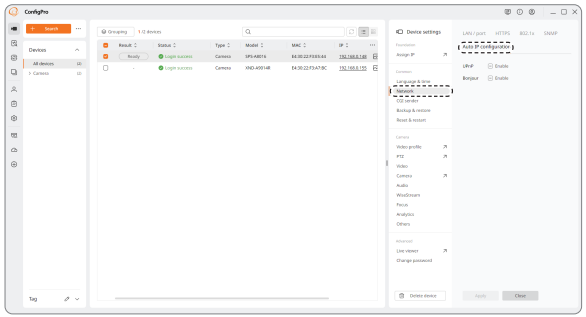

1. Click the camera from the list that you want to automatically configure the IP.
2. On the right side of the ConfigPro screen, click <**Network**>.
3. Click <**Auto IP configuration**> in the right tab.
4. To use the <**UPnP**> or <**Bonjour**> protocol, select <**Enable**> and click the [**Apply**] button.

PORT RANGE FORWARD (PORT MAPPING) SETUP

If you have installed a Broadband Router with a camera connected, you must set the port range forwarding on the Broadband Router so that a remote PC can access the camera in it.

Manual Port Range Forwarding

1. From the Setup menu of the Broadband Router, select <**Applications & Gaming**> - <**Port Range Forward**>.
   For setting the port range forward for a third-party Broadband Router, refer to the user guide of that Broadband Router.
2. Select <**TCP**> and <**UDP Port**> for each connected camera to the Broadband Router.
   The number of each port to be configured to the IP router should be set according to the port number designated in <**Setup**> - <**Basic**> - <**IP & Port**> on the camera web viewer.
3. When done, click [**Save Settings**].
   Your settings will be saved.

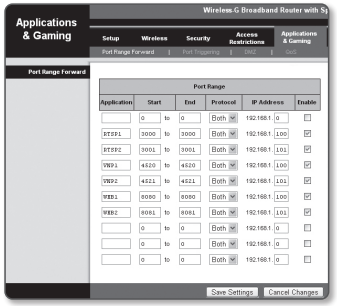

- Port forwarding setting is an example of setting CISCO IP router.
- The settings may differ depending on the connected Broadband Router model.
  For more information, refer to the user manual of the applicable router.

Setting up Port Range Forward for several network cameras

- You can set a rule of Port Forwarding on the Broadband Router device through its configuration web page.
- A user can change each port using the camera setting screen.

When Camera1 and Camera2 are connected to a router :

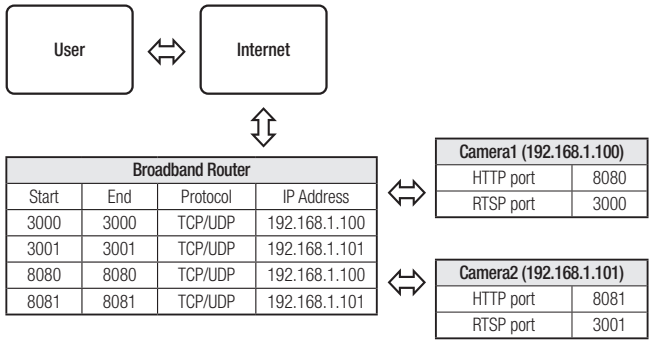

- Port forwarding can be done without additional router setup if the router supports the UPnP (Universal Plug and Play) function. After connecting the network camera, select the checkbox from the menu <**Quick connect**> in <**DDNS**> in "**Settings** -> **Network** -> **DDNS**".

CONNECTING TO THE CAMERA FROM A SHARED LOCAL PC

1. Run ConfigPro.
2. Select a network server where the cameras are installed and log in.
3. Once logged in, the list of cameras connected to the server will be displayed.
4. Double-click a camera to access.
   The Internet browser starts and connects to the camera.

- Access to the camera can also be gained by typing the camera's IP address in the address bar of the Internet browser.

CONNECTING TO THE CAMERA FROM A REMOTE PC VIA THE INTERNET

On a remote computer that is not in the Broadband Router's network cluster is not allowed, users can access cameras within a Broadband Router's network by using the camera's DDNS URL.

1. Before you can access a camera in the Broadband Router network, you should have set the port range forward for the Broadband Router.
2. From the remote PC, launch the Internet browser and type the DDNS URL address of the camera, or the IP address of the Broadband Router in the address bar.
   ex) http://ddns.hanwha-security.com/ID

- To use DDNS, sign up at the DDNS homepage (http://ddns.hanwha-security.com) and register the product at [**My DDNS**]>[**Register Product**].

CONNECTING TO THE CAMERA

Normally, you would

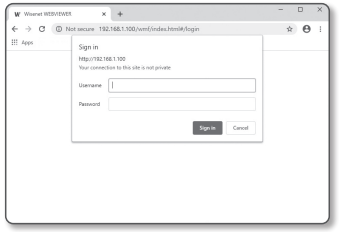

1. Launch the Internet browser.
2. Type the IP address of the camera in the address bar.
   ex) • IP address (IPv4) : 192.168.1.100 ➞ http://192.168.1.100
   - the Login dialog should appear.
   • IP address (IPv6) : 2001:230:abcd: ffff:0000:0000:ffff:1111 ➞ http://[2001:230:abcd:ffff:0000:0000:ffff:1111] - the Login dialog should appear.

If the HTTP port is other than 80

1. Launch the Internet browser.

Type the IP address and HTTP port number of the camera in the address bar.
ex) IP address : 192.168.1.100:HTTP Port number(8080)
➞ http://192.168.1.100:8080 - the Login dialog should appear.

Using URL

1. Launch the Internet browser.
2. Type the DDNS URL of the camera in the address bar.
   ex) URL address : http://ddns.hanwha-security.com/ID
   - the Login dialog should appear.

■ Network connection is disabled in the LAN only environment.

Connecting via UPnP

1. Run the client or operating system in support of the UPnP protocol.
2. Click the camera name for search.
   In the Windows operating system, click the camera name searched from the network menu.
   - The login window is displayed.

Connecting via Bonjour

1. Run the client or operating system in support of the Bonjour protocol.
2. Click the camera name for search.
   In the Mac operating system, click the camera name searched from the Bonjour tab of Safari.
   - The login window is displayed.

■ To use the UPnP or Bonjour protocol, refer to "**Automatically configuring IP**".

To check the DDNS address

If the camera is connected directly to a DHCP-based cable modem or DSL modem, the IP address will change each time it tries to connect to the ISP (the company you subscribed to).
If this is the case, you will not be informed of the IP address changed by DDNS.

Once you register a dynamic IP-based device with the DDNS server, you can easily check the changed IP when you try to access the device.
To register your device to the <**DDNS**> server, visit http://ddns.hanwha-security.com and register your device first, and then set the Web Viewer's <**Network**> - <**DDNS**> to <**DDNS**>, as well as providing <**Product ID**> that had been used for DDNS registration.

PASSWORD SETTING

When you access the product for the first time, you must register the login password.

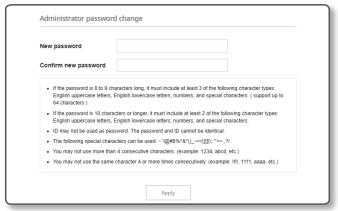

- For a new password with 8 to 9 characters, you must use at least 3 of the following: uppercase/lowercase letters, numbers and special characters. For a password with 10 characters or longer , you must use at least 2 types of those mentioned. (support up to 64 characters)
  - Special characters that are allowed. : ~`!@#$%^&*( )_-+={ }[ ]\\;:'"< >.,?/
- Space is not allowed for password.
- The password and ID cannot be identical.
- You cannot use the same character repeatedly or sequential characters on a keyboard as passwords for enhanced security.
- Be sure to remember the password you set, as you will need to reset the product by pressing the [**SET**] button if you lose your password.

LOGIN

Whenever you access the camera, the login window appears.
Enter the User ID and password to access the camera.

1. Enter "**admin**" in the <**User name**> input box.
   The administrator's ID, "**admin**," can be changed in the Web Viewer.
2. Enter the password in the <**Password**> input field.
3. Click [**Sign in**].
   If you have logged in successfully, you will the Live Viewer screen.

- When you access the camera web viewer, pay special attention to the security by checking whether the image data is encrypted.

- You will experience the best video quality if the screen size is 100%. Reducing the ratio may cut the image on the borders.

CAMERA WEB VIEWER SETUP

1. Click the [**Setup (⚙)**] icon.
2. The Settings window appears.
3. You can configure settings for the camera's basic information, video, audio, network, event, analysis, and system over the network.
4. Click <**Help (?)**> to view detailed descriptions of each function.

TROUBLESHOOTING

PROBLEM	SOLUTION
When a Windows 10 user accesses the web viewer through Chrome or Firefox, the sound volume of microphone changes periodically.	• This is what happens when microphone driver has been set to Realtek driver. Install the High Definition Audio device (Windows Default Driver) or the third party driver as the microphone driver.
What are the specifications for WAVE files necessary to play audio at the time of an event?	• Sampling rate of 48,000 KHz or less is recommended. • For bits per sample (bps), up to 8/16 bit is recommended. • Only PCM encoding format is supported.
No video is displayed when accessing the plug-in free webviewer on Safari via HTTPS.	• On the authentication popup window prompted when initially accessing https, click "View Authentication Certificate" and select the "Always trust when connecting to the designated webviewer IP" check box. • If the webviewer continues failing to display a video after you select "Next" on the message window below, press the command key + Q to exit the Safari browser, access again and follow the procedures stated above.
I can't access the camera from a web browser.	• Check to make sure that the camera's Network settings are appropriate. • Check to make sure that all network cables have been connected properly. • If connected using DHCP, verify that the camera is able to acquire dynamic IP addresses without any problem. • If the camera is connected to a Broadband Router, verify that port forwarding is properly configured.
Viewer got disconnected during monitoring.	• Connected Viewers become disconnected upon any change to camera or network configurations. • Check all network connections.
The camera connected to the network is not detected in the ConfigPro program.	• If another software (process) is occupying port 7711 in the Windows Task Manager or Resource Monitor, terminate it and try searching again. • Turn off the firewall settings on your PC and then search the camera again.
Images overlap.	• Check whether two or more cameras are set to a single multicast address instead of different addresses. If a single address is used for multiple cameras, the images may overlap.

PROBLEM	SOLUTION
No image appears.	• If the transmission method is set to multicast, check whether there is a router that supports multicast in the LAN the camera is connected to.
Voice is not recorded even though audio input settings are configured.	• You must enable the <Audio In> check box in <Basic> - <Video Profile>.
<Motion detection> of <Analytics> is set to <Enable>, but no notification e-mail reaches me even when an analysis event had occurred.	• Verify the settings in the following sequence: A. Check <Data & Time> settings. B. The <Motion detection> should be set to <Enable>. C. Check if the <E-mail> option of <Event setup> menu is checked to use.
No signal is found at the Alarm Output port even when an intelligent video analysis event is generated.	• Check alarm output port settings.
Cannot record into the Micro SD card.	• Check if the memory card is defective. • When replacing the Micro SD card, it must be done while the power is disconnected from the product.
Micro SD card is inserted but the camera does not operate properly.	• Check if the Micro SD card is inserted in the proper direction. Operation of Micro SD card that is formatted by other devices is not guaranteed with this camera unit. • Format the Micro SD card again in <Setup> ➞ <Event> ➞ <Storage> menu.
Cannot record in the NAS.	• Confirm that the information registered in the NAS is correct.
It reports that NAS setting has failed.	• Confirm that the IP address of the NAS is valid. • Confirm that the ID/password of the NAS is valid. • Confirm that you can access the folder designated as the default folder using the ID of the NAS. • Confirm that the NAS SMB/CIFS items are unchecked. • Confirm that the NAS IP address and the camera IP address are in the same format. ex) The NAS & camera subnet mask initial value is 255.255.255.0. If the IP address is 192.168.20.32 then the NAS IP address should be in the range of 192.168.20.1~192.168.20.255. • Check whether you tried to access as another user without formatting the default folder saved or used. • Confirm that you used recommended NAS equipment.

Any changes or modifications in construction of this device which are not expressly approved by the party responsible for compliance could void the user's authority to operate the equipment.

This device complies with part 15 of the FCC Rules. Operation is subject to the following two conditions: (1) This device may not cause harmful interference, and (2) this device must accept any interference received, including interference that may cause undesired operation.

This equipment has been tested and found to comply with the limits for a Class A digital device, pursuant to part 15 of the FCC Rules. These limits are designed to provide reasonable protection against harmful interference when the equipment is operated in a commercial environment.
This equipment generates, uses, and can radiate radio frequency energy and, if not installed and used in accordance with the instruction manual, may cause harmful interference to radio communications. Operation of this equipment in a residential area is likely to cause harmful interference in which case the user will be required to correct the interference at his own expense.

This device complies with Industry Canada license-exempt RSS standard(s). Operation is subject to the following two conditions:

(1) this device may not cause interference, and (2) this device must accept any interference, including interference that may cause undesired operation of the device.

Le présent appareil est conforme aux CNR d'Industrie Canada applicables aux appareils radio exempts de licence. L'exploitation est autorisée aux deux conditions suivantes :

(1) l'appareil ne doit pas produire de brouillage, et (2) l'utilisateur de l'appareil doit accepter tout brouillage radioélectrique subi, même si le brouillage est susceptible d'en compromettre le fonctionnement.

eco
RoHS compliant

Hanwha Vision cares for the environment at all product manufacturing stages, and is taking measures to provide customers with more environmentally friendly products.
The Eco mark represents Hanwha Vision's devotion to creating environmentally friendly products, and indicates that the product satisfies the EU RoHS Directive.

Correct Disposal of This Product (Waste Electrical & Electronic Equipment)

(Applicable in the European Union and other European countries with separate collection systems)

This marking on the product, accessories or literature indicates that the product and its electronic accessories (e.g. charger, headset, USB cable) should not be disposed of with other household waste at the end of their working life. To prevent possible harm to the environment or human health from uncontrolled waste disposal, please separate these items from other types of waste and recycle them responsibly to promote the sustainable reuse of material resources.
Household users should contact either the retailer where they purchased this product, or their local government office, for details of where and how they can take these items for environmentally safe recycling.
Business users should contact their supplier and check the terms and conditions of the purchase contract. This product and its electronic accessories should not be mixed with other commercial wastes for disposal.

Correct disposal of batteries in this product

(Applicable in the European Union and other European countries with separate battery return systems.)

This marking on the battery, manual or packaging indicates that the batteries in this product should not be disposed of with other household waste at the end of their working life. Where marked, the chemical symbols Hg, Cd or Pb indicate that the battery contains mercury, cadmium or lead above the reference levels in EC Directive 2006/66. If batteries are not properly disposed of, these substances can cause harm to human health or the environment.
To protect natural resources and to promote material reuse, please separate batteries from other types of waste and recycle them through your local, free battery return system.

Hanwha Vision