Hanwha Vision

CÁMARA DE RED

Manual de consulta rápida

TNO-A45080R
TNO-A45090R

CE

Important
Please check 'Manuals' from our website, before connecting to the Supply,
https://www.hanwhavision.com/en/download-data/

Warranty
Please check "Product warranty information" from our website.
https://www.hanwhavision.com/en/support/warranty/

Videos processed by surveillance equipment cannot be accessed arbitrarily by the manufacturer.

We recommend to use the officially compatible VMS version or latest Hanwha NVR version when integrating with VMS or Hanwha NVR.

eco
RoHS compliant

Hanwha Vision cares for the environment at all product manufacturing stages, and is taking measures to provide customers with more environmentally friendly products.
The Eco mark represents Hanwha Vision's devotion to creating environmentally friendly products, and indicates that the product satisfies the EU RoHS Directive.

Correct Disposal of This Product (Waste Electrical & Electronic Equipment)

(Applicable in the European Union and other European countries with separate collection systems)

This marking on the product, accessories or literature indicates that the product and its electronic accessories (e.g. charger, headset, USB cable) should not be disposed of with other household waste at the end of their working life. To prevent possible harm to the environment or human health from uncontrolled waste disposal, please separate these items from other types of waste and recycle them responsibly to promote the sustainable reuse of material resources.

Household users should contact either the retailer where they purchased this product, or their local government office, for details of where and how they can take these items for environmentally safe recycling.

Business users should contact their supplier and check the terms and conditions of the purchase contract. This product and its electronic accessories should not be mixed with other commercial wastes for disposal.

Correct disposal of batteries in this product

(Applicable in the European Union and other European countries with separate battery return systems.)

This marking on the battery, manual or packaging indicates that the batteries in this product should not be disposed of with other household waste at the end of their working life. Where marked, the chemical symbols Hg, Cd or Pb indicate that the battery contains mercury, cadmium or lead above the reference levels in EC Directive 2006/66. If batteries are not properly disposed of, these substances can cause harm to human health or the environment.

To protect natural resources and to promote material reuse, please separate batteries from other types of waste and recycle them through your local, free battery return system.

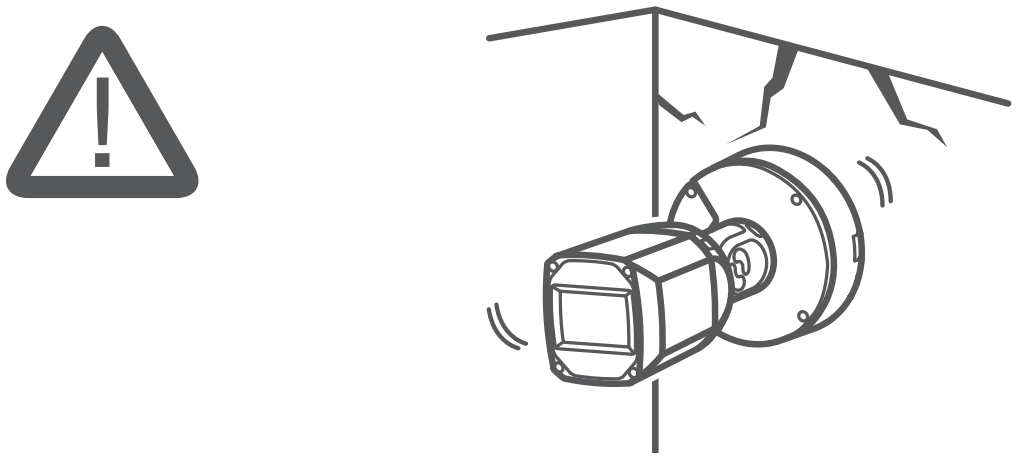

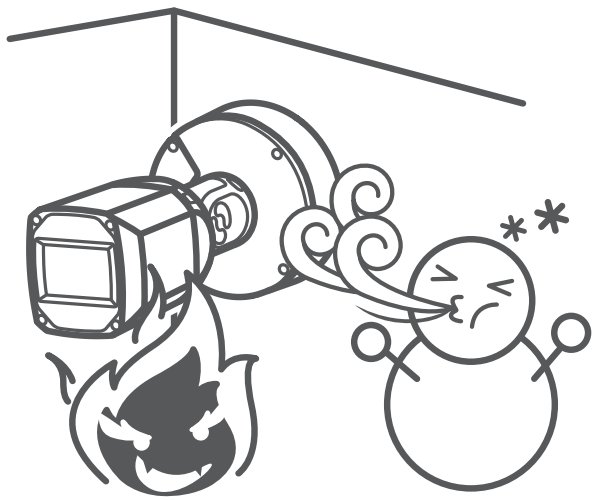

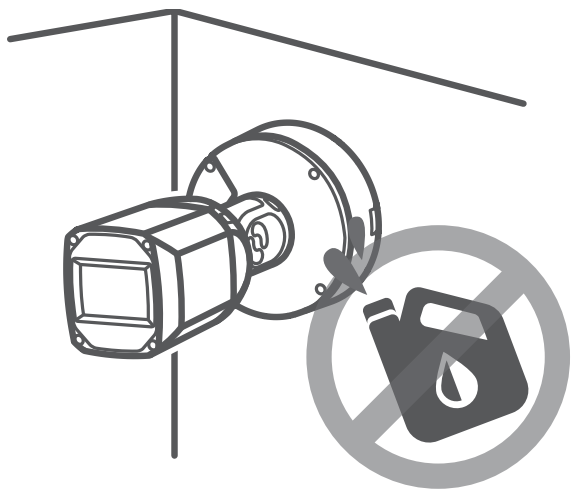

COMPONENT

Los accesorios pueden variar según el país o la región.

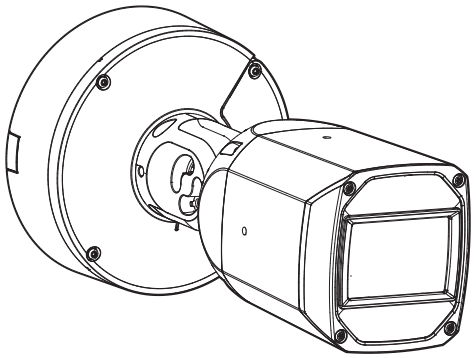

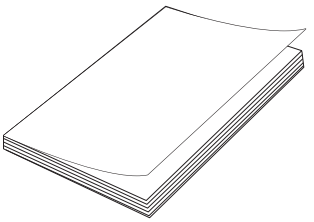

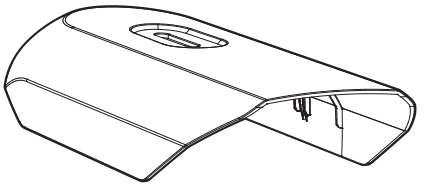

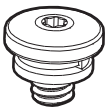

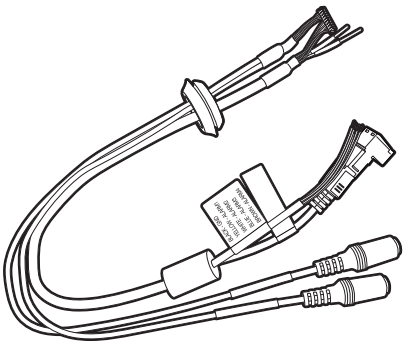

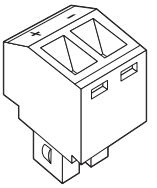

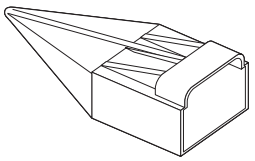

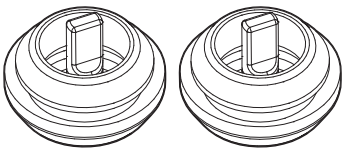

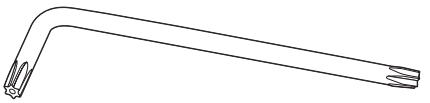

INSTALLATION

1

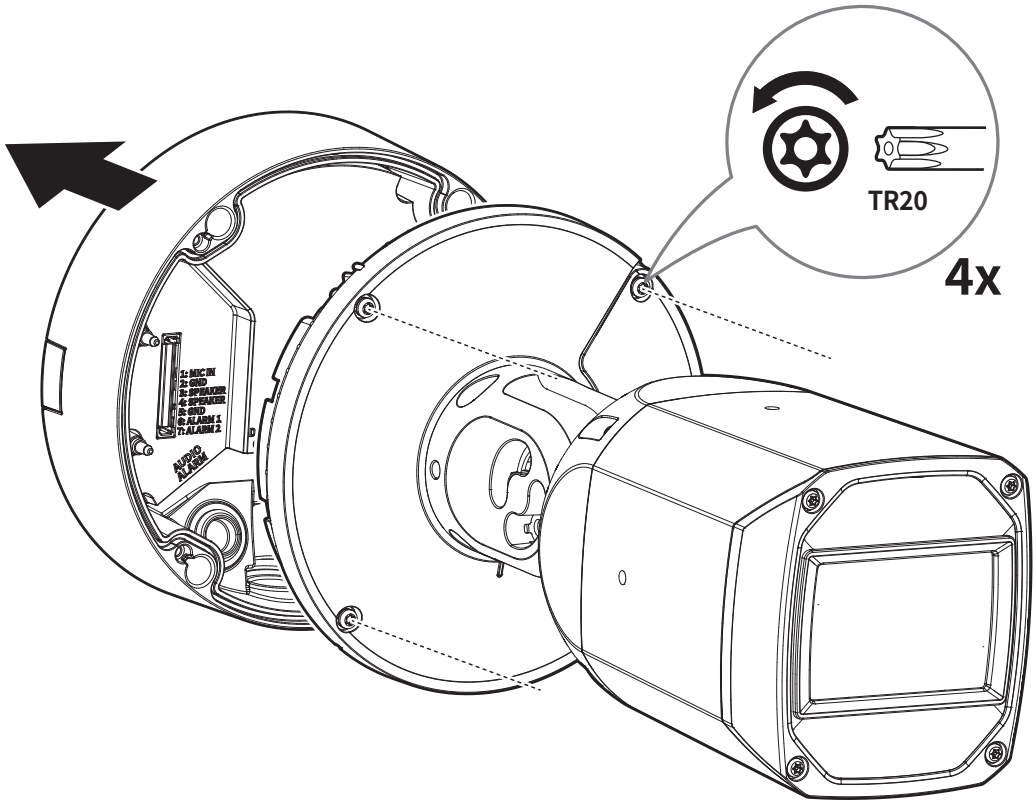

2

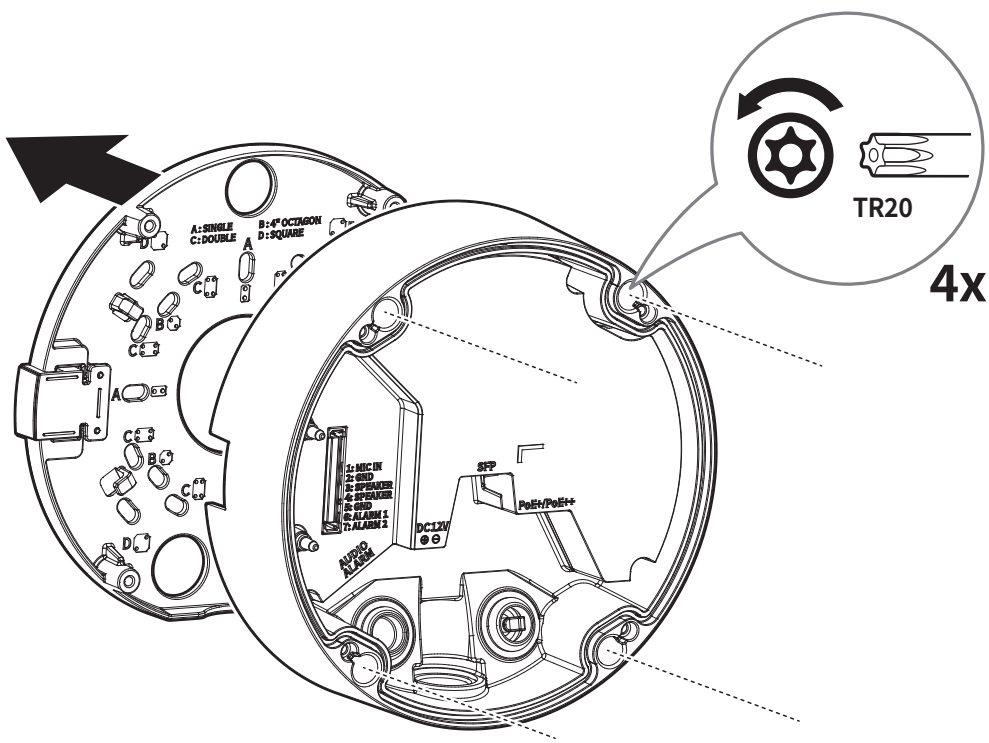

INSTALLATION

3

- No se incluye: Tarjeta Micro SD

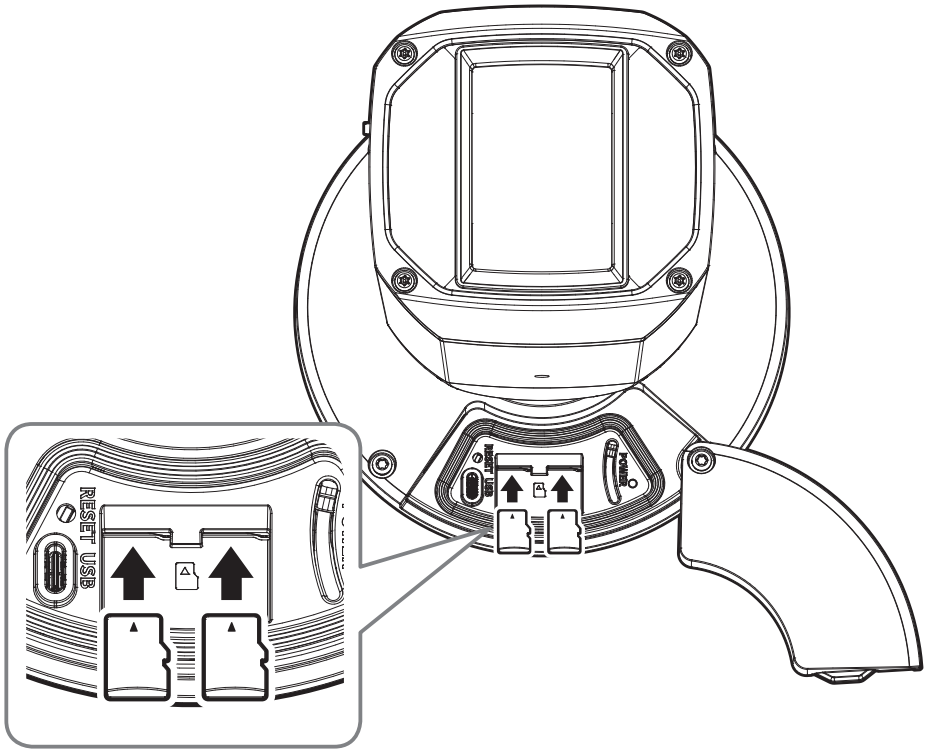

4

- Instalación directa en la pared o el techo

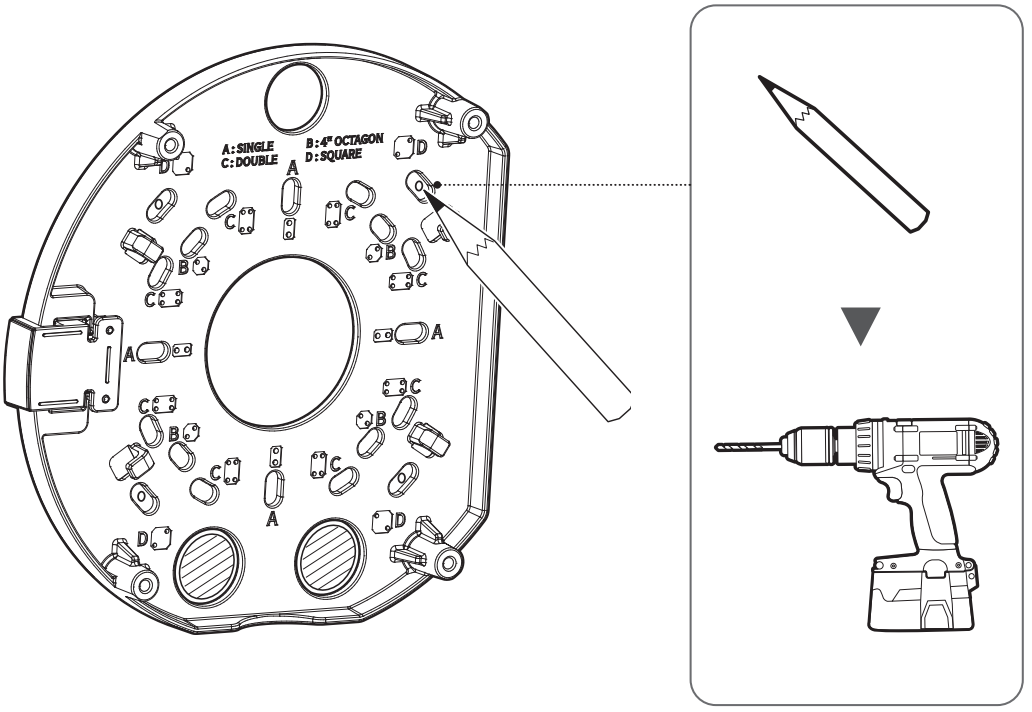

5

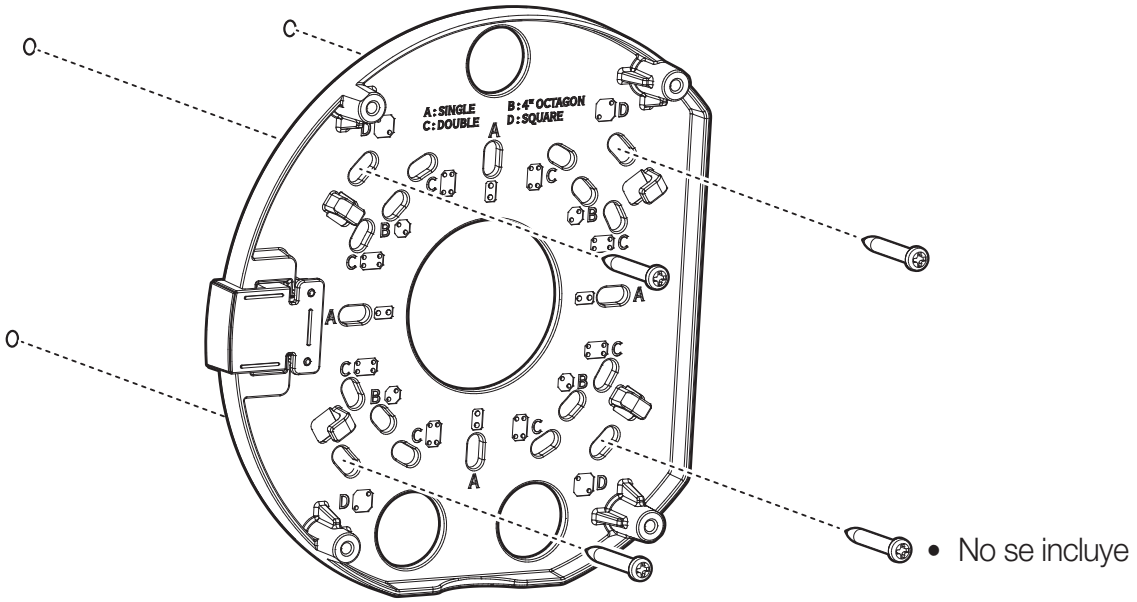
A:SINGLE
C:DOUBLE
B:4" OCTAGON
D:SQUARE
• No se incluye

6

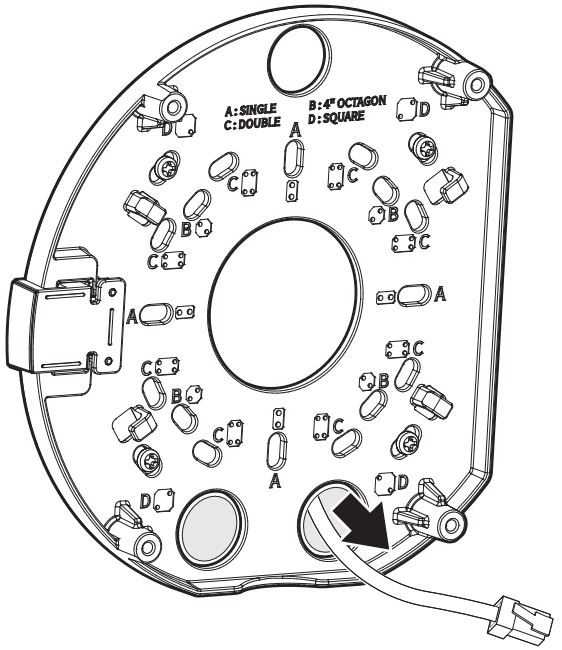
A:SINGLE
C:DOUBLE
B:4" OCTAGON
D:SQUARE

7-1

- Instalación mediante conductos

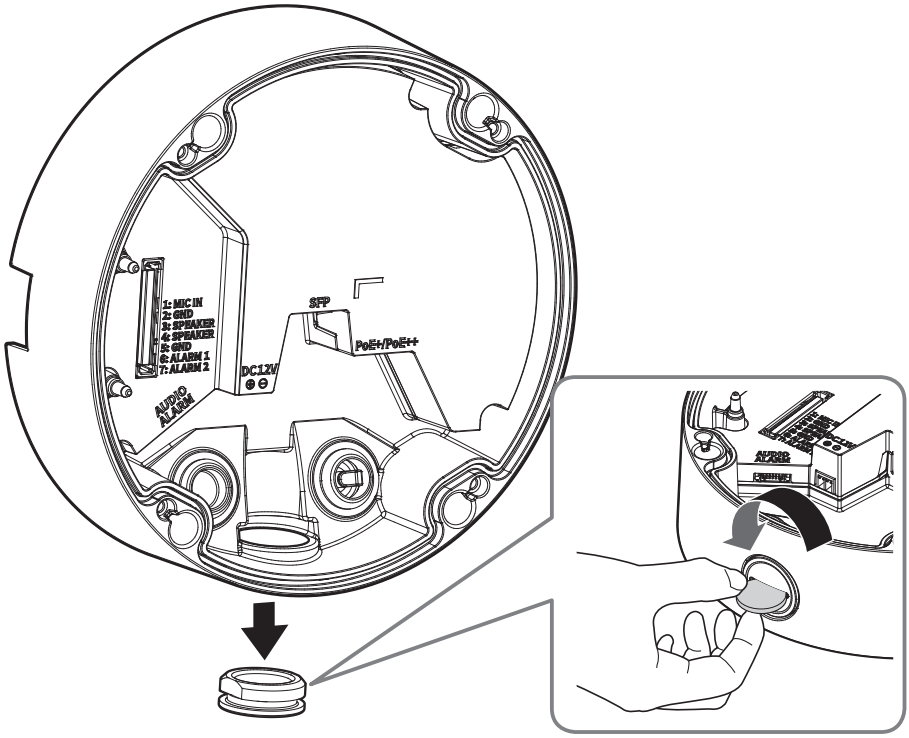

7-2

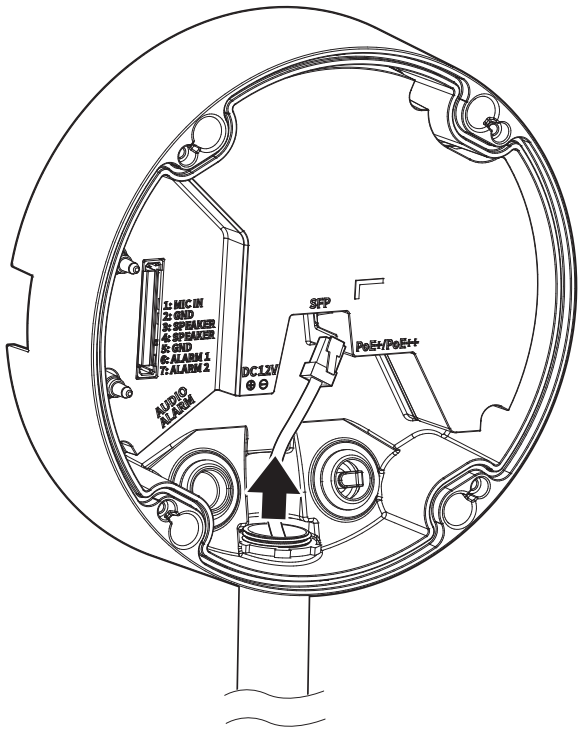

8

- Instalación del cable de red

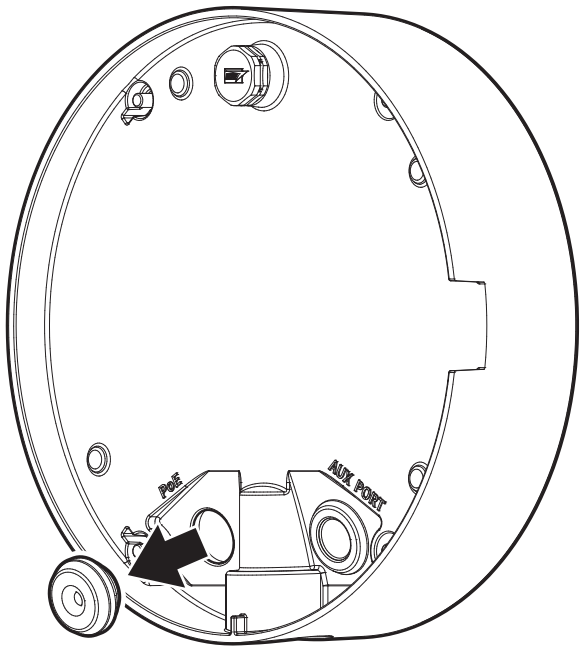

9

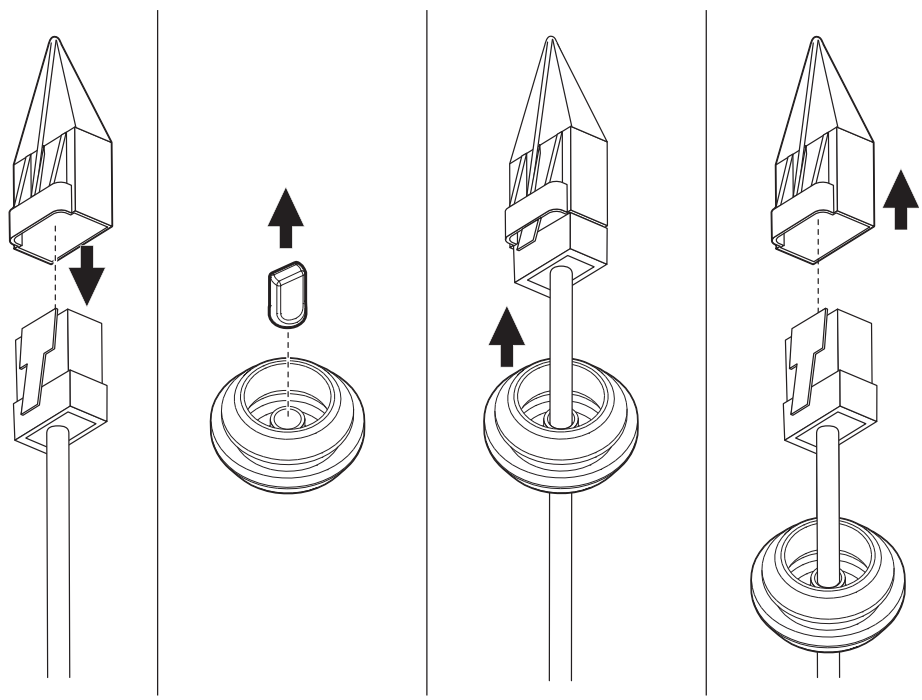

10

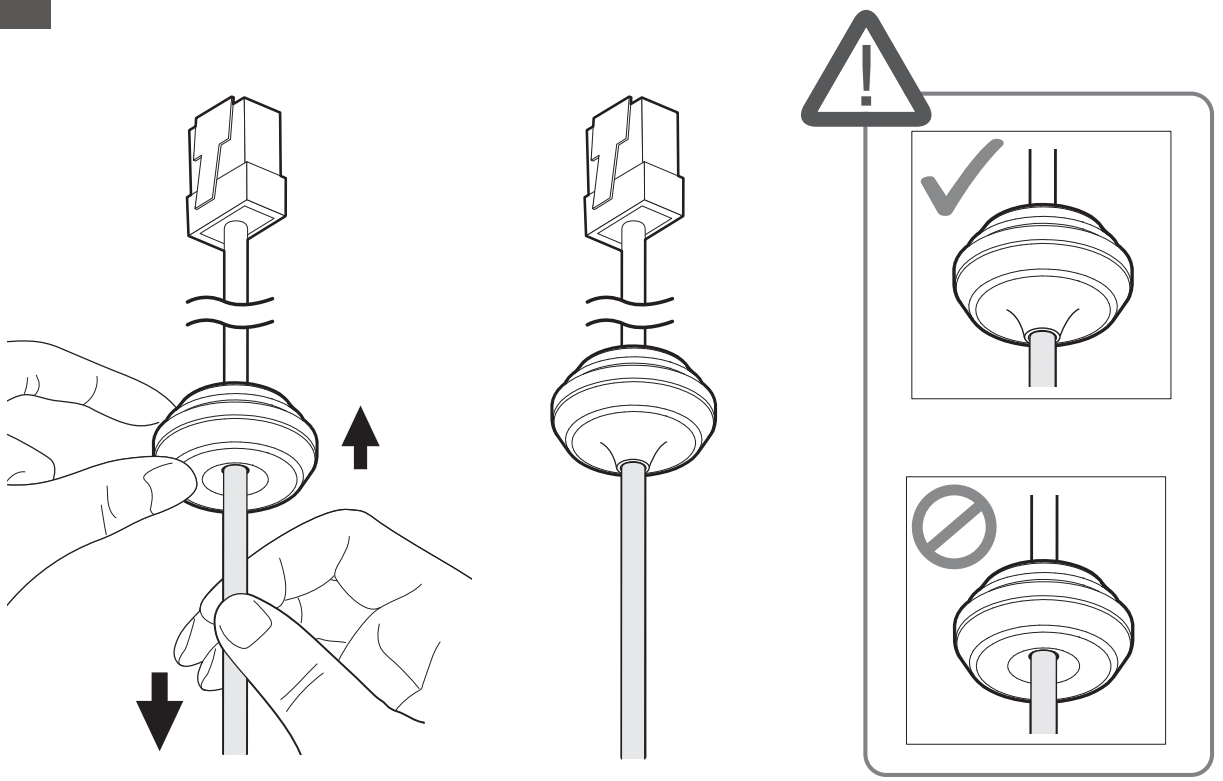

11

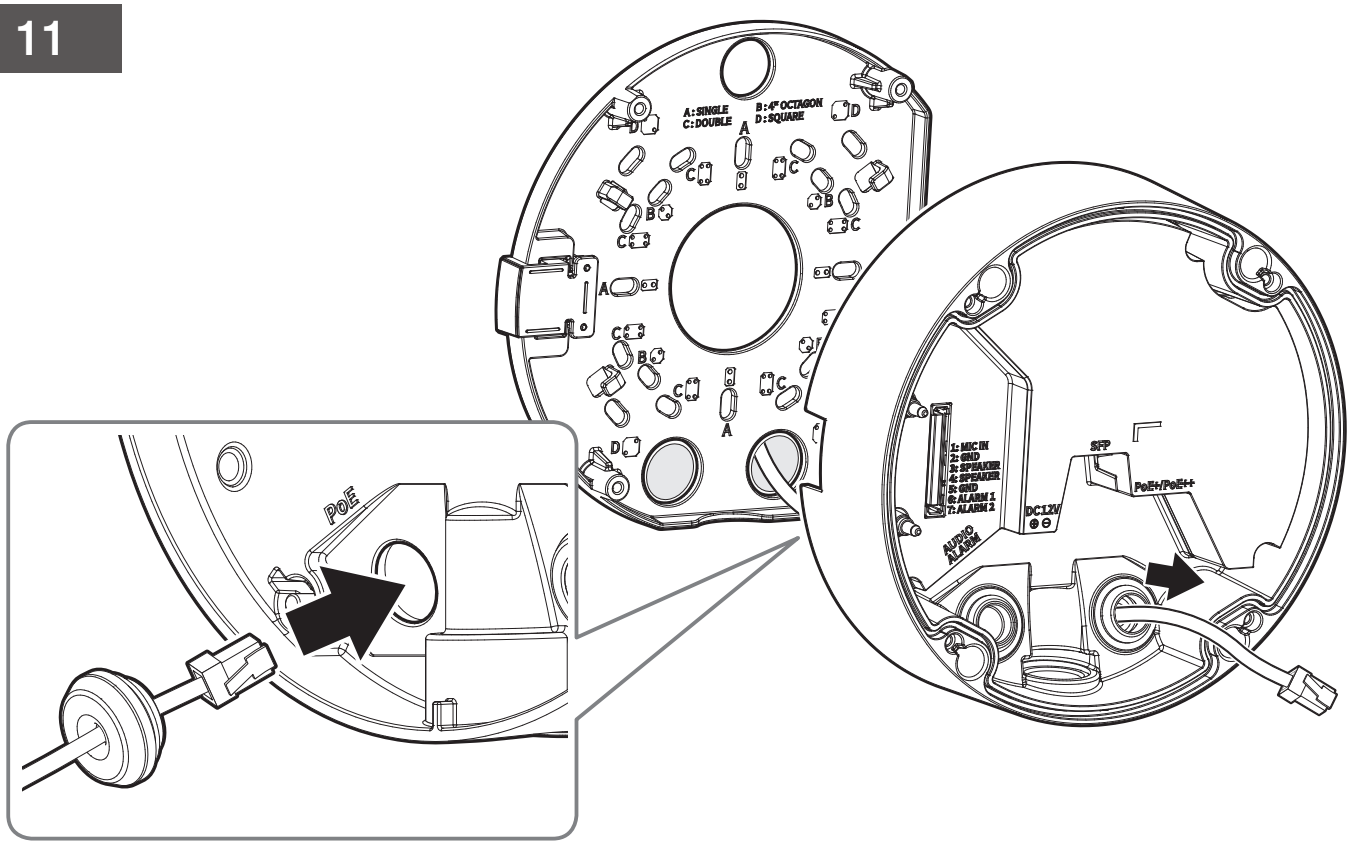
A: SINGLE
C: DOUBLE
B: 4" OCTAGON
D: SQUARE
PoE
1: MIC IN
2: GND
3: SPEAKER
4: SPEAKER
5: GND
6: ALARM 1
7: ALARM 2
AUDIO ALARM
DC12V
SFP
PoE+/PoE++

12

- Instalación de los cables de Audio/Alarma (CC de 12 V)

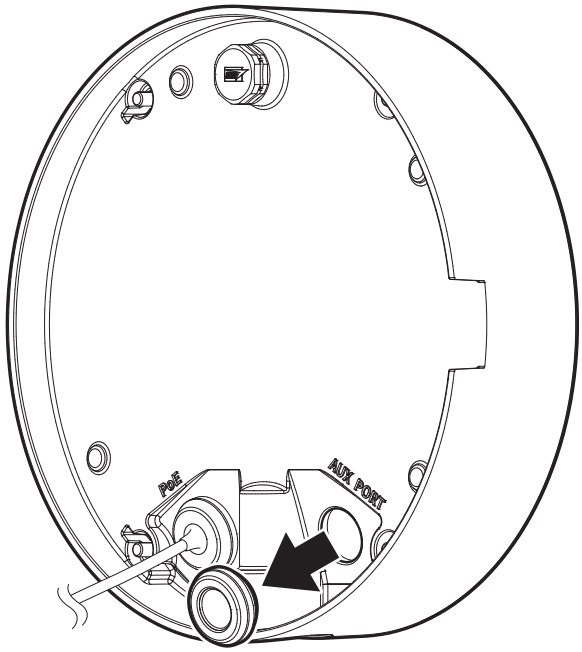

13

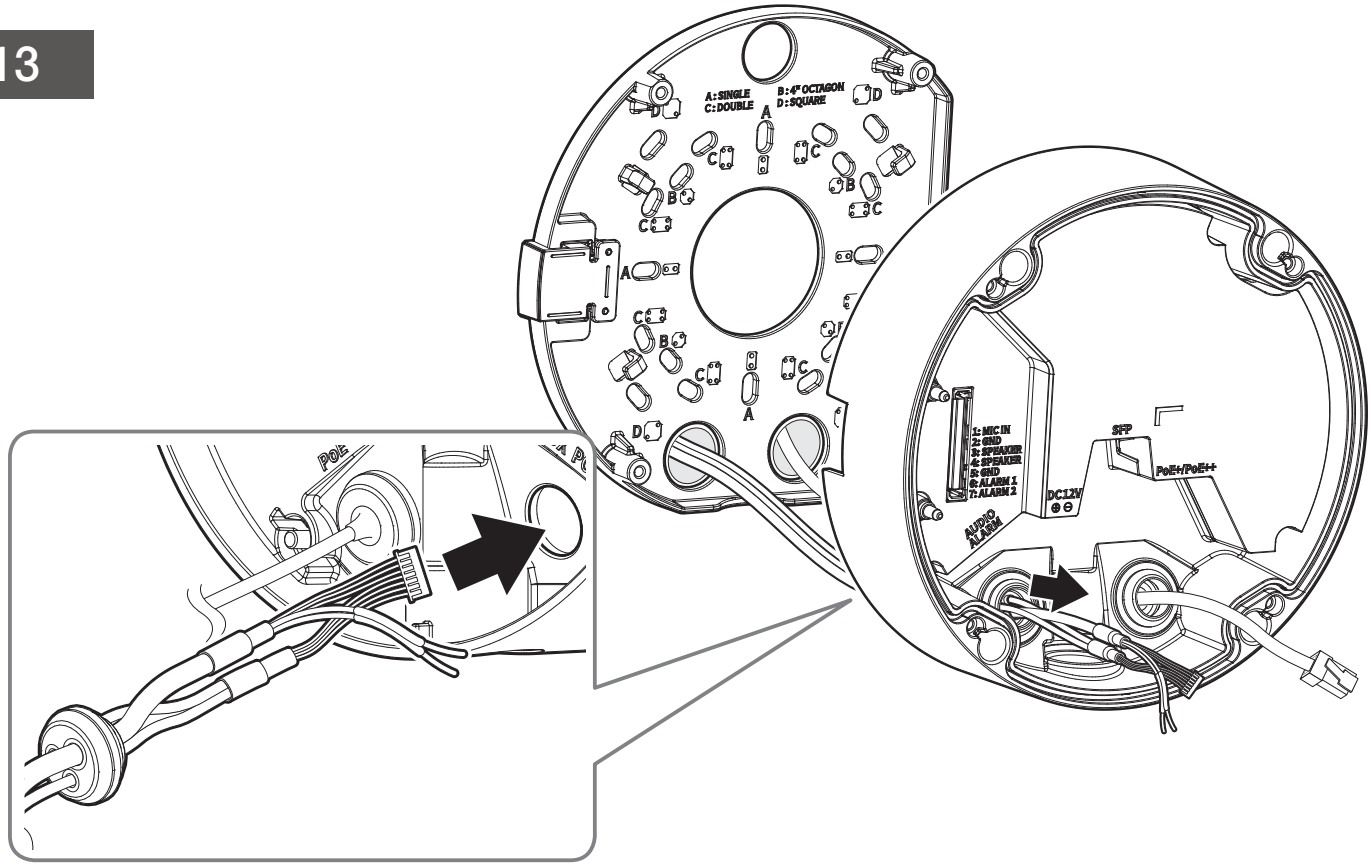

14 • Conexión de los cables de alimentación de 12 V CC

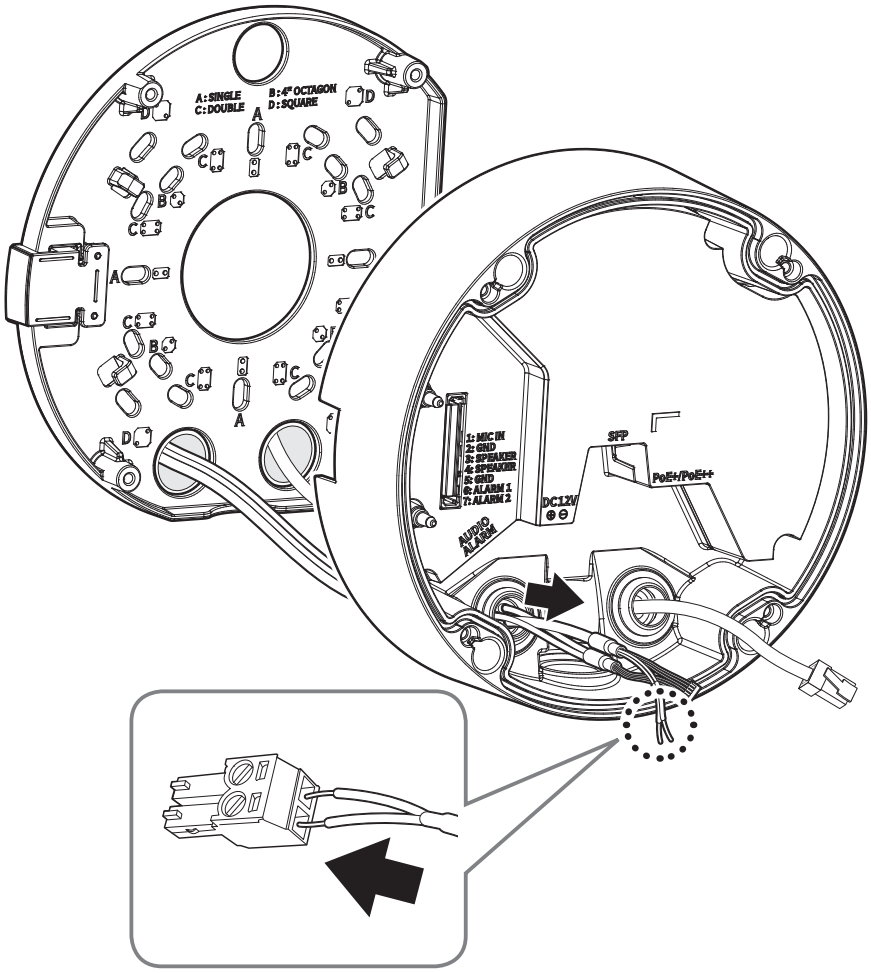

15

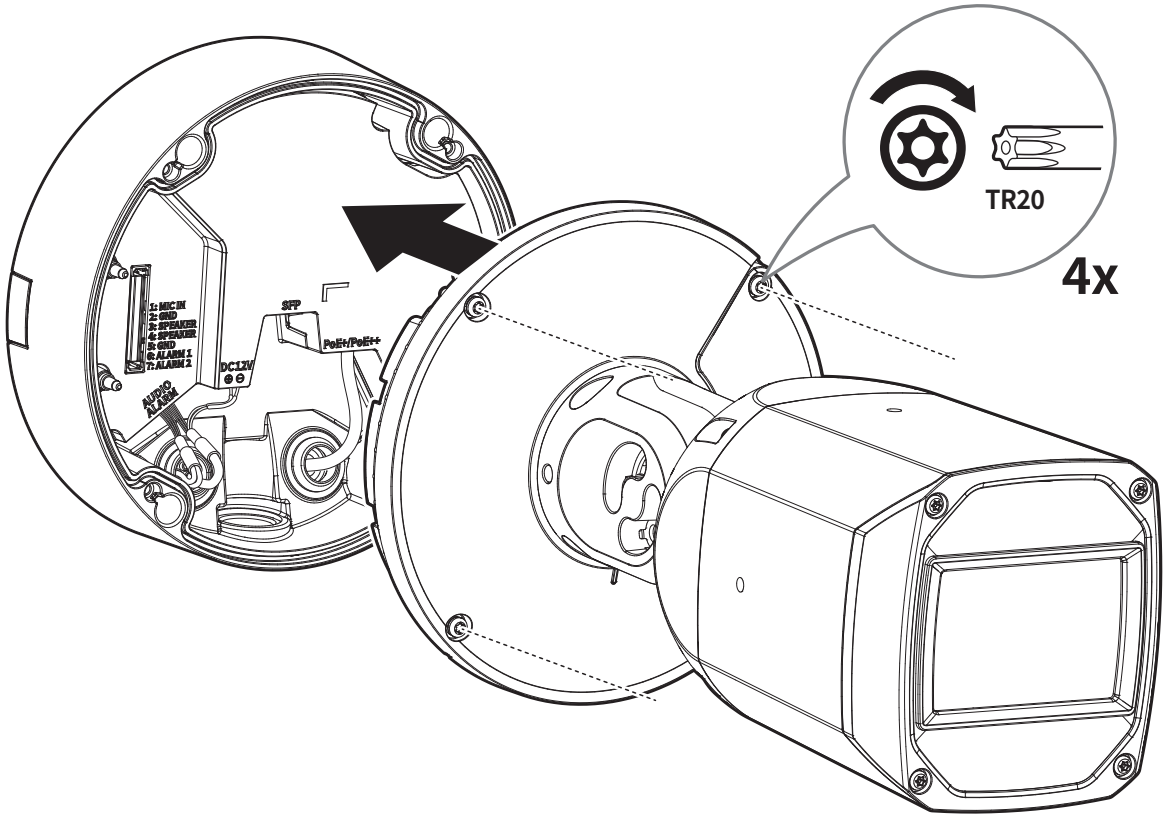
1: MIC IN
2: GND
3: SPEAKER
4: SPEAKER
5: GND
6: ALARM 1
7: ALARM 2
AUDIO ALARM
DC12V
SFP
PoE+/PoE++
TR20
4x

16

- No se incluye: Dongle WiFi, adaptador OTG

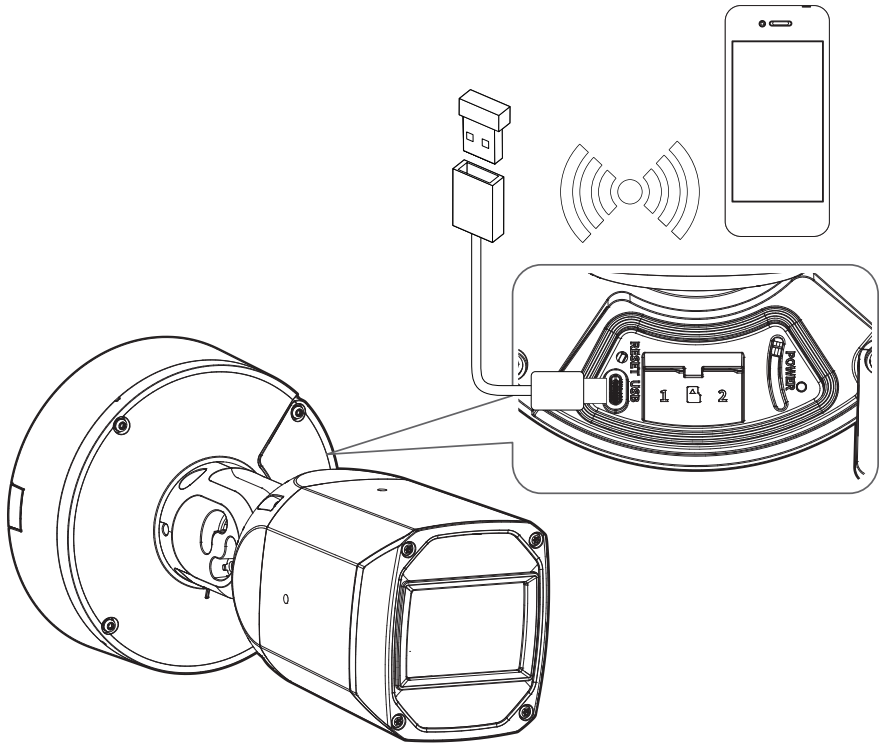

17

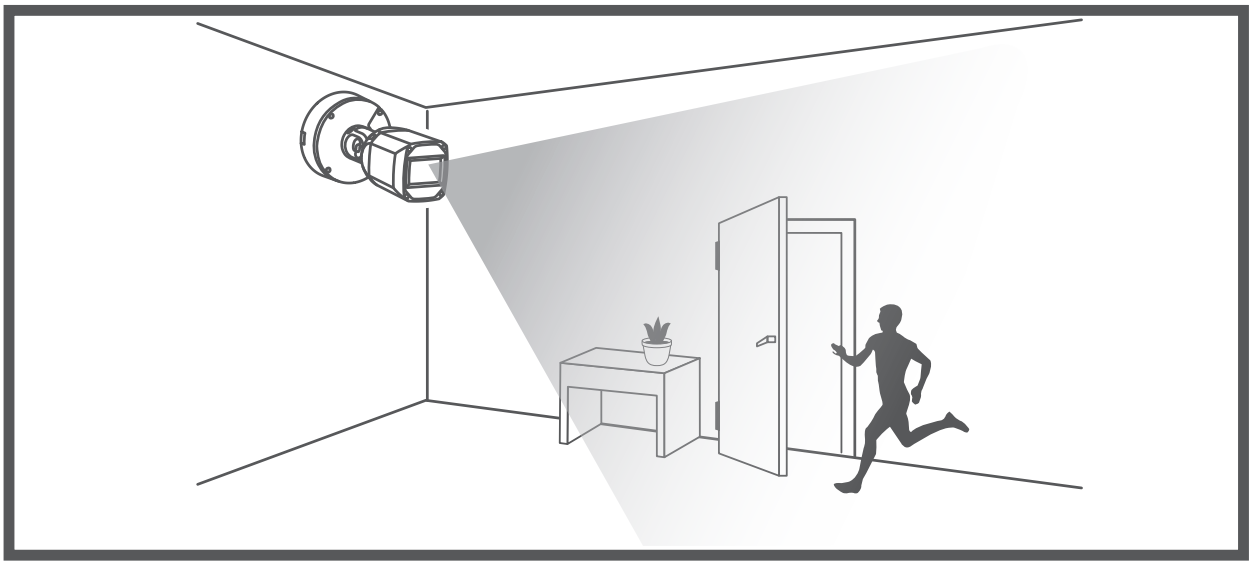

18-1

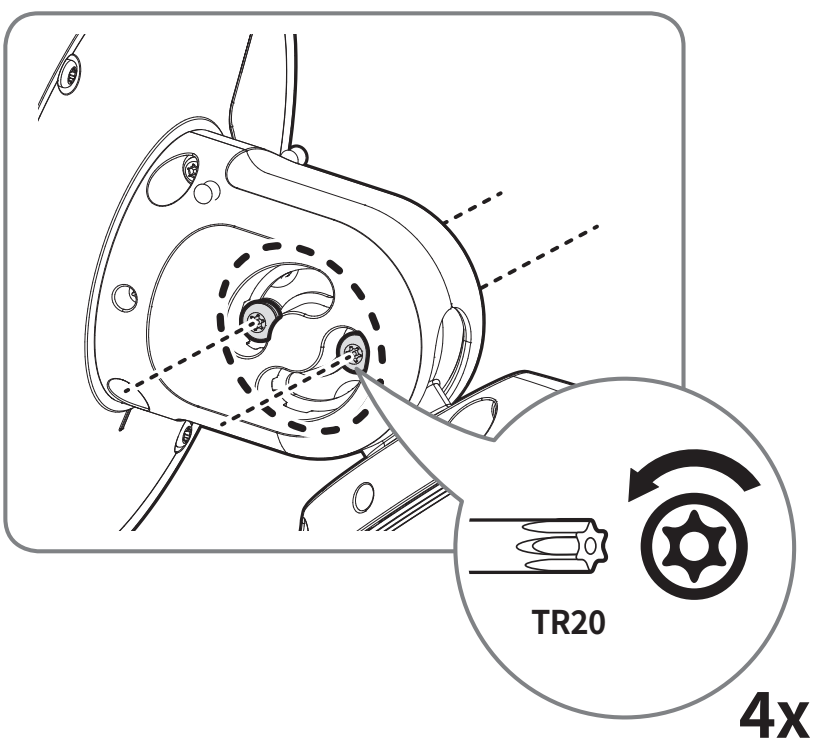

18-2

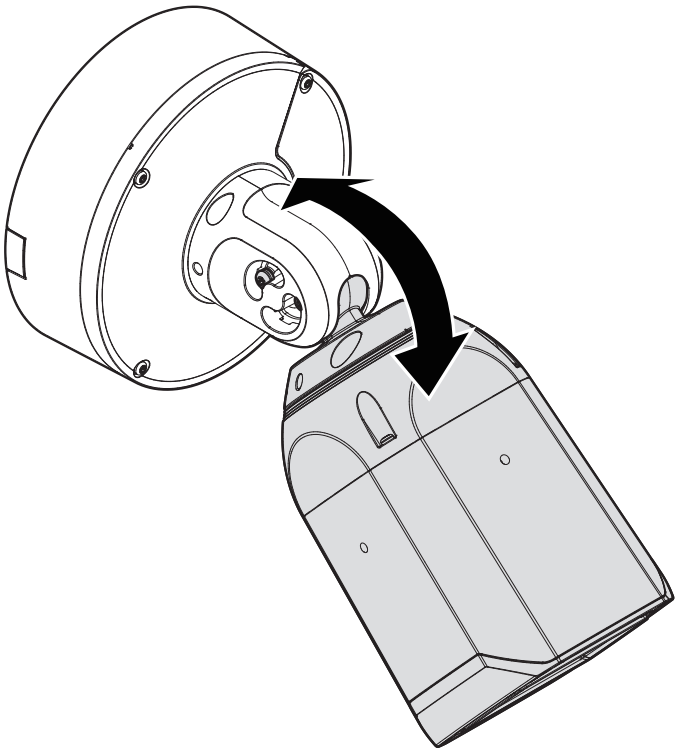

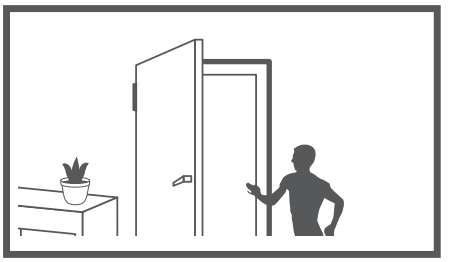

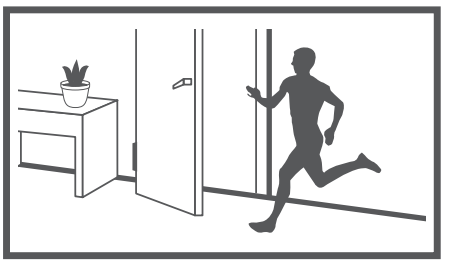

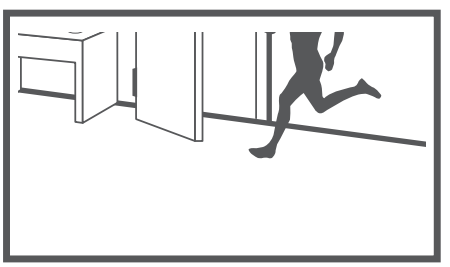

18-3

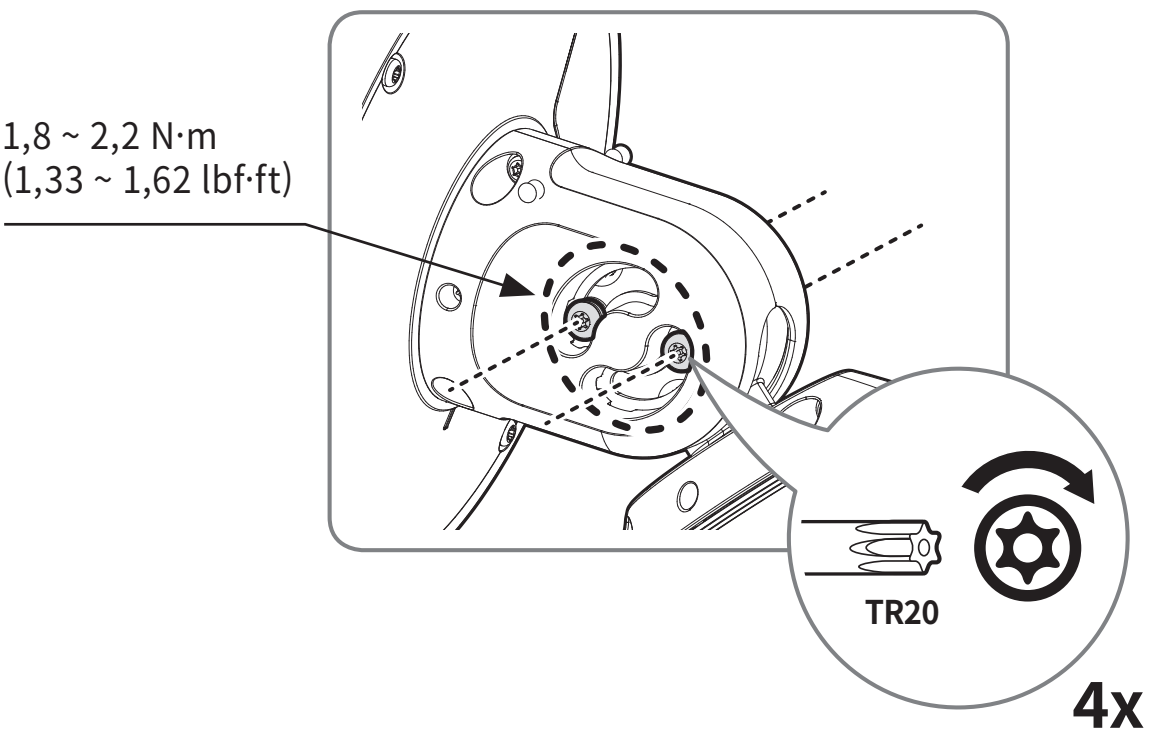

19-1

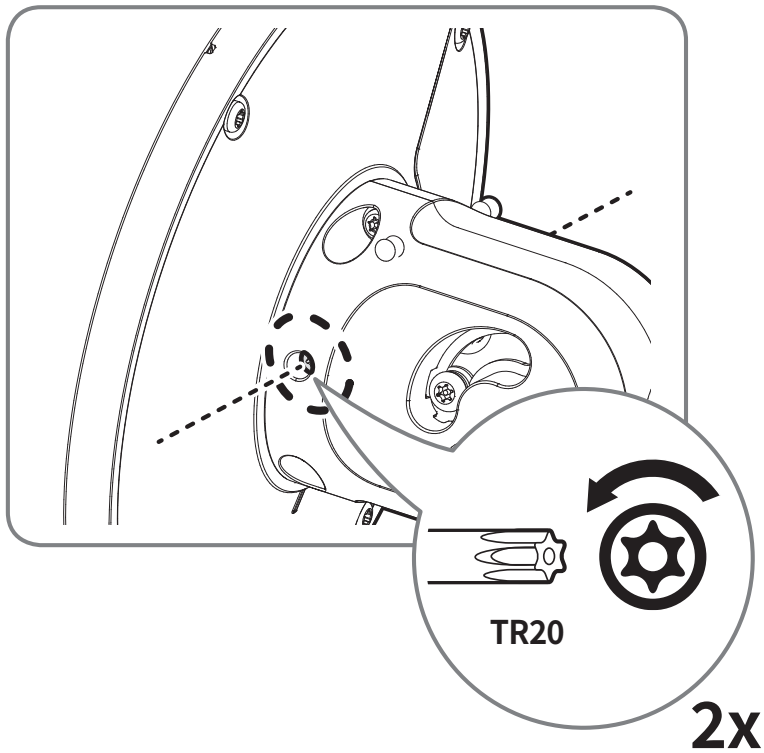

19-2

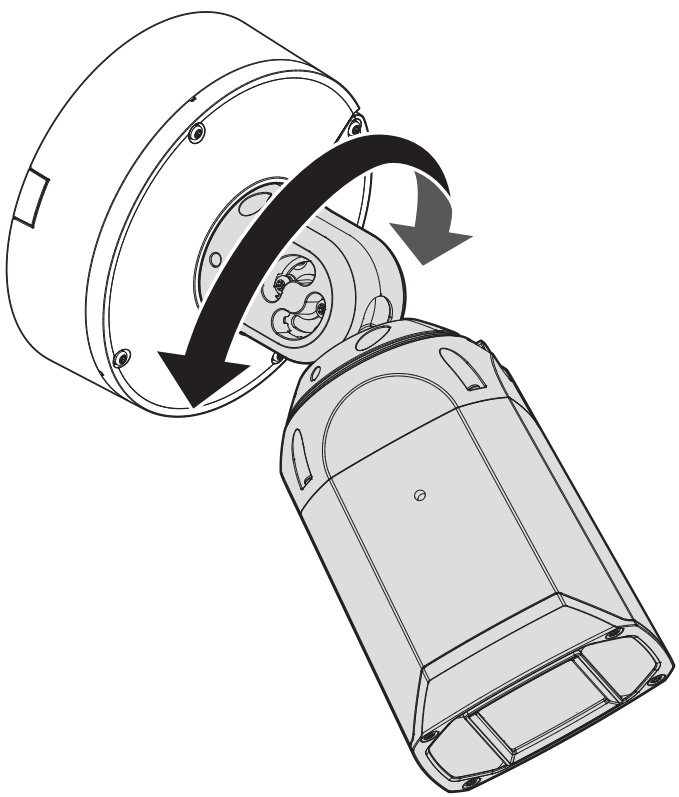

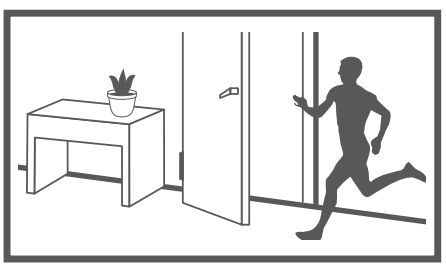

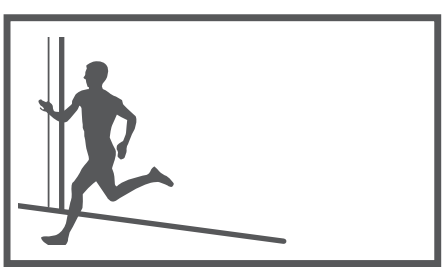

19-3

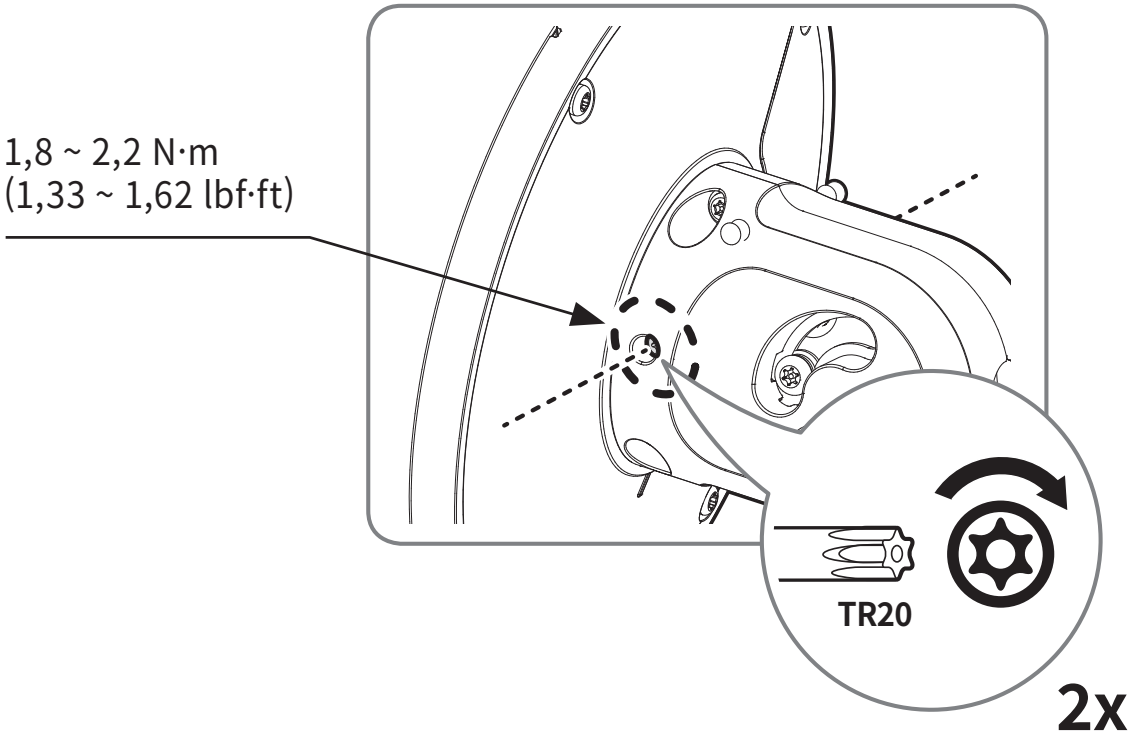

20-1

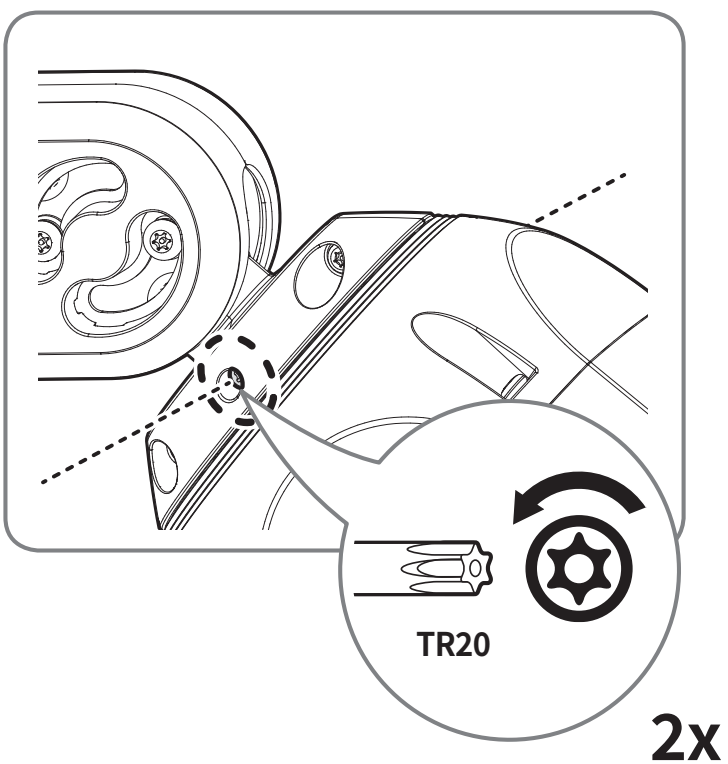

20-2

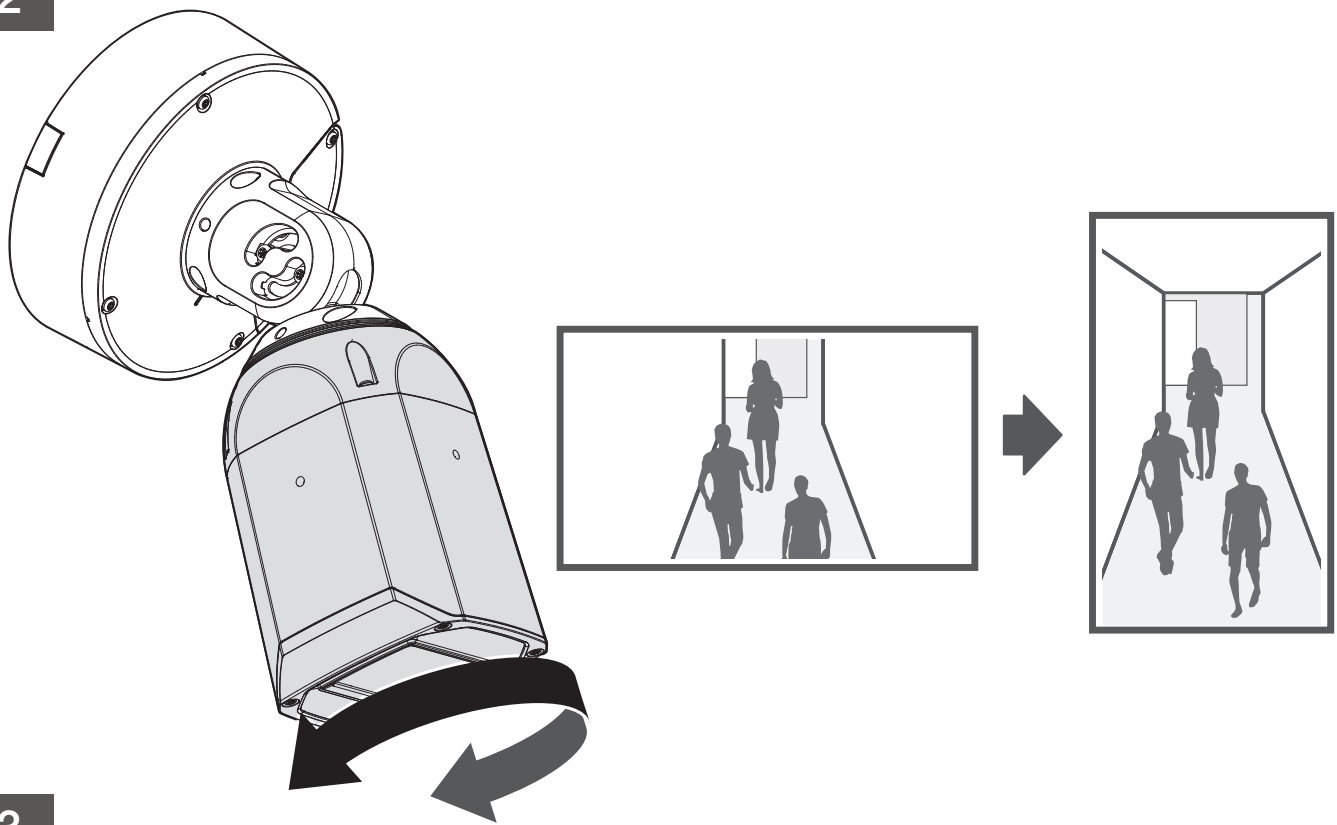

20-3

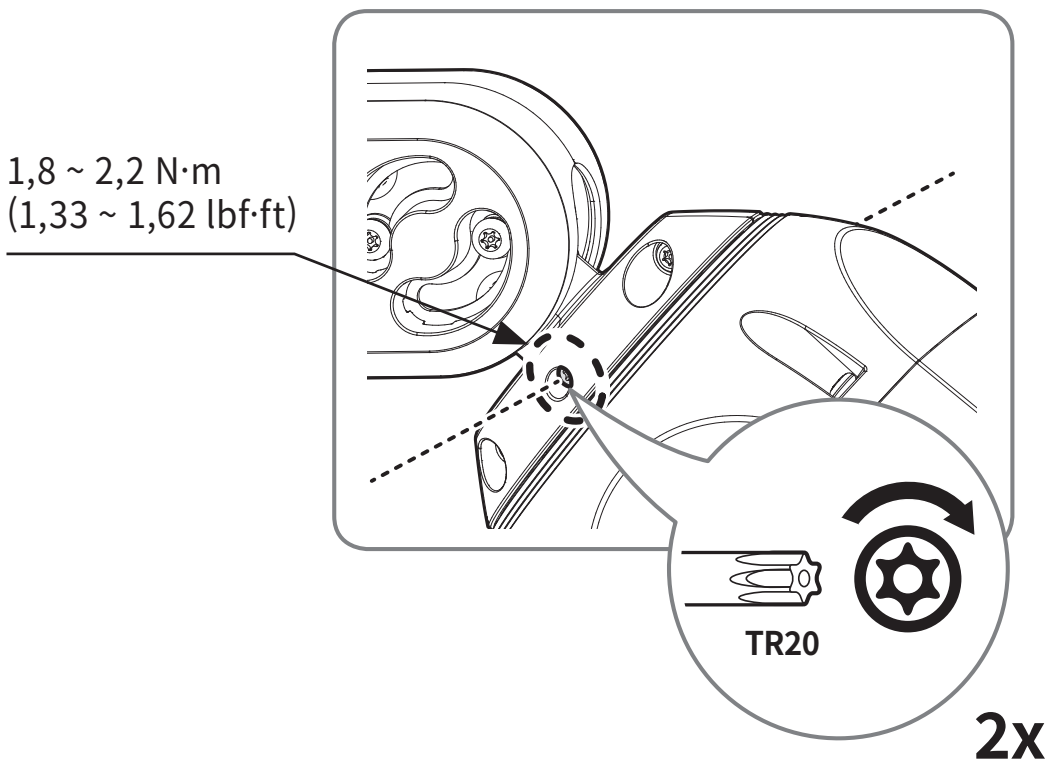

21

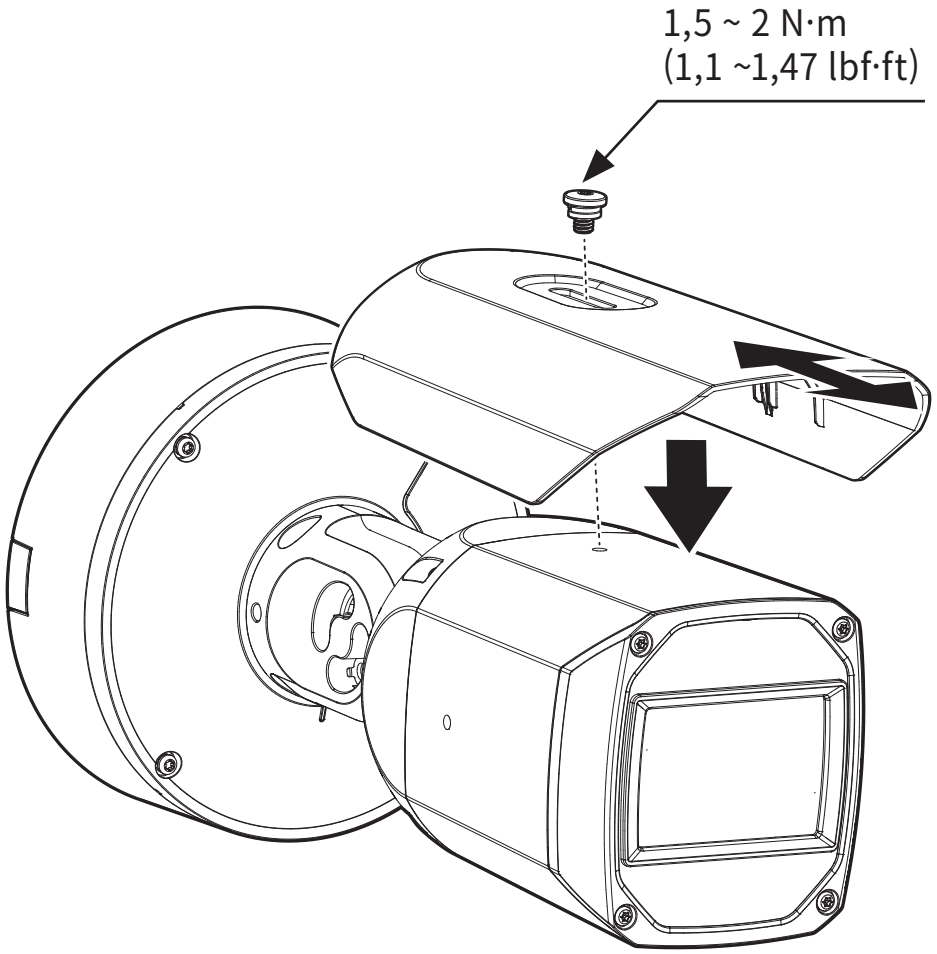

22

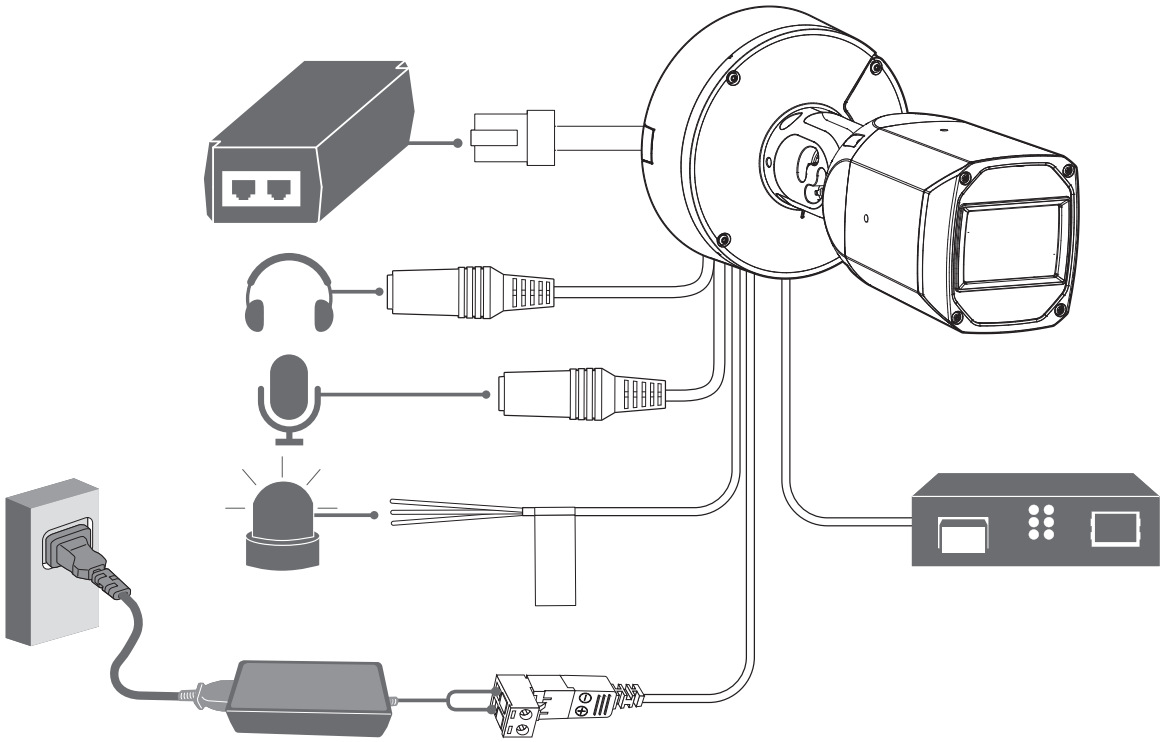

23

CONFIGURACIÓN DE CONTRASEÑA

Al acceder al producto por primera vez, debe registrar la contraseña de inicio de sesión.

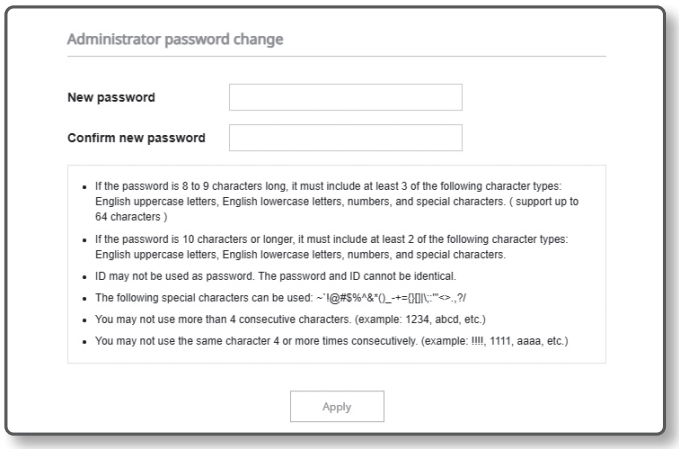

- Para generar una nueva contraseña con 8 a 9 caracteres, debe utilizar, al menos, 3 de los siguientes caracteres: letras mayúsculas/minúsculas, números y caracteres especiales. Para generar una contraseña con 10 caracteres o más, debe utilizar, al menos, 2 tipos de los caracteres mencionados. (admite hasta 64 caracteres)
  - Caracteres especiales que se permiten. : ~`!@#$%^&*( )_-+={ }[ ]|\;:'"<>.,?/
- No se permiten espacios en la contraseña.
- La contraseña y el ID no pueden ser iguales.
- No puede usar el mismo carácter repetidamente o caracteres secuenciales en un teclado como contraseñas para una mayor seguridad.
- Recuerde la contraseña que ha introducido, ya que si la olvida tendrá que restablecer el producto pulsando el botón [**RESET**].

INICIO DE SESIÓN

Siempre que acceda a la cámara, aparecerá la ventana de inicio de sesión.
Introduzca el ID de usuario y la contraseña para acceder a la cámara.

1. Introduzca "**admin**" en el cuadro de entrada <**User Name**>.
2. Introduzca la contraseña en el campo de entrada <**Password**>.
3. Haga clic en [**Sign in**].

CONEXIÓN A WiFi

Ajuste de la cámara

1. Connect the OTG gender (Type C) and WiFi dongle to the USB Type C terminal.

Configuración del teléfono inteligente

1. Instale la aplicación de instalación de Wisenet.
2. Seleccione el SSID de la cámara después de encender el WiFi.
3. Ejecute la aplicación de instalación de Wisenet.
4. Cuando inicie sesión en la cámara, se conectará el vídeo.
5. Puede ajuatar el ángulo de visión mientras ve el vídeo a través del smartphone.

HEVC Advance™
Covered by patents at patentlist.accessadvance.com

microSD, microSDHC, and microSDXC Logos are trademarks of SD-3C LLC. microSD, microSDHC, microSDXC are trademarks or registered trademarks of SD-3C, LLC in the United States, other countries or both.

EAC

Подлежит использованию по назначению
в нормальных условиях
Срок службы : 7 лет.

Türkiye Distribütörü

EDS Elektronik Destek Sanayi ve Ticaret Ltd. Şti.
Meclis Mah. Teraziler Cad. Hayran Sk. (Eskisi Kılıç Sk.) No: 4 Sancaktepe / İstanbul / Türkiye
Tel +90.216.313.25.15

ENTES ELEKTRONİK CİHAZLAR İMALAT VE TİC. A.Ş.
Dudullu Org.San.Bölg. 1. Cad. No:23 34776 Ümraniye / İstanbul / Türkiye
Tel +90.216.313.01.10

TEKNOMAKS TEKNOLOJI / TEKNOMAKS BILISIM
MERDİVENKÖY MAH.DİKYOL SOK. BUSINESS ISTANBUL No:2, Kat:7, D:B67, 34732 Kadıköy / İstanbul / Türkiye
Tel +90.212.217.54.22

Cihazın Ticaret Bakanlığınca önerilen ortalama ömrü
Cihazın EEE yönetmeliklerine uygun olduğuna benzer beyan

Hanwha Vision