Hanwha Vision

網路攝影機
快速入門指南

TNO-A45080R
TNO-A45090R

CE

Important
Please check 'Manuals' from our website, before connecting to the Supply,
https://www.hanwhavision.com/en/download-data/

Warranty
Please check "Product warranty information" from our website.
https://www.hanwhavision.com/en/support/warranty/

Videos processed by surveillance equipment cannot be accessed arbitrarily by the manufacturer.

We recommend to use the officially compatible VMS version or latest Hanwha NVR version when integrating with VMS or Hanwha NVR.

eco
RoHS compliant

Hanwha Vision cares for the environment at all product manufacturing stages, and is taking measures to provide customers with more environmentally friendly products.
The Eco mark represents Hanwha Vision's devotion to creating environmentally friendly products, and indicates that the product satisfies the EU RoHS Directive.

Correct Disposal of This Product (Waste Electrical & Electronic Equipment)

(Applicable in the European Union and other European countries with separate collection systems)

This marking on the product, accessories or literature indicates that the product and its electronic accessories (e.g. charger, headset, USB cable) should not be disposed of with other household waste at the end of their working life. To prevent possible harm to the environment or human health from uncontrolled waste disposal, please separate these items from other types of waste and recycle them responsibly to promote the sustainable reuse of material resources.

Household users should contact either the retailer where they purchased this product, or their local government office, for details of where and how they can take these items for environmentally safe recycling.

Business users should contact their supplier and check the terms and conditions of the purchase contract. This product and its electronic accessories should not be mixed with other commercial wastes for disposal.

Correct disposal of batteries in this product

(Applicable in the European Union and other European countries with separate battery return systems.)

This marking on the battery, manual or packaging indicates that the batteries in this product should not be disposed of with other household waste at the end of their working life. Where marked, the chemical symbols Hg, Cd or Pb indicate that the battery contains mercury, cadmium or lead above the reference levels in EC Directive 2006/66. If batteries are not properly disposed of, these substances can cause harm to human health or the environment.

To protect natural resources and to promote material reuse, please separate batteries from other types of waste and recycle them through your local, free battery return system.

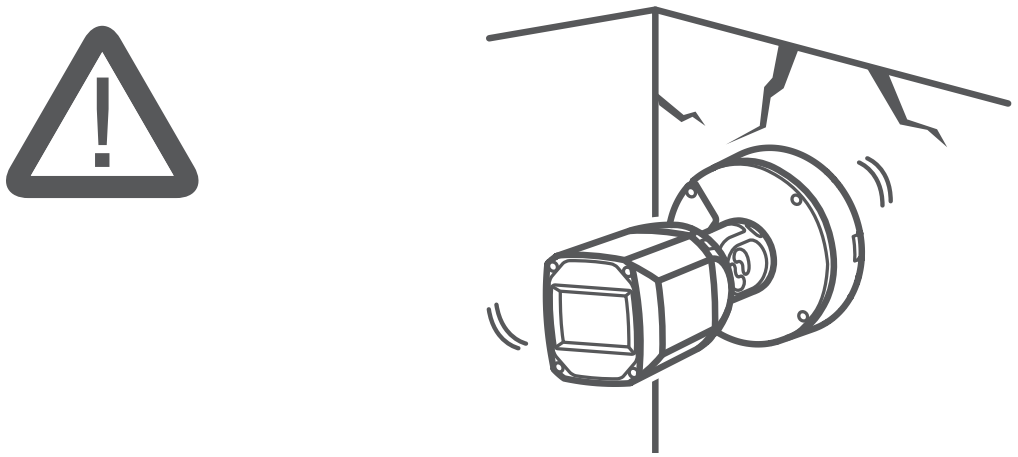

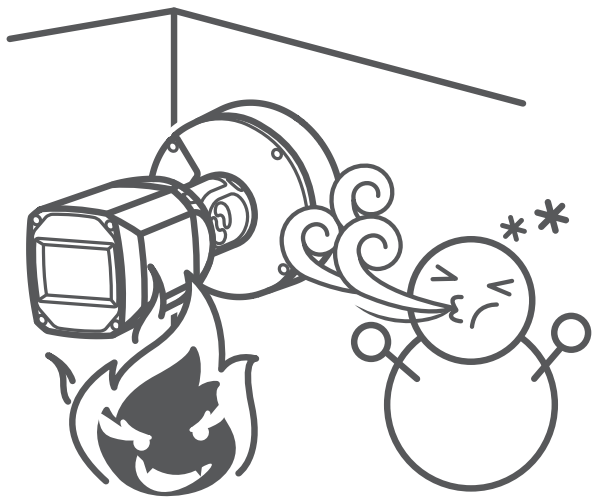

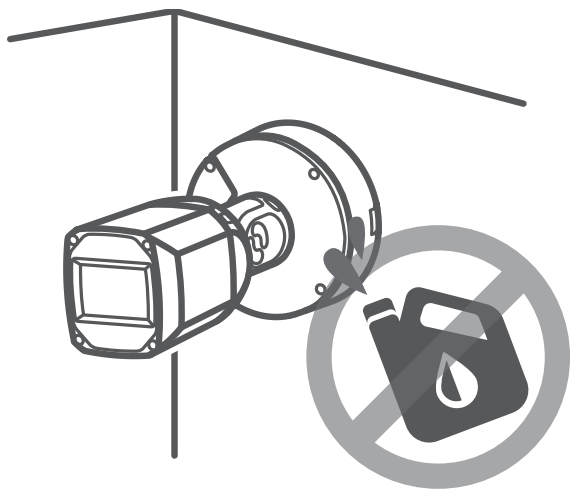

COMPONENT

配件可能因國家/地區而異。

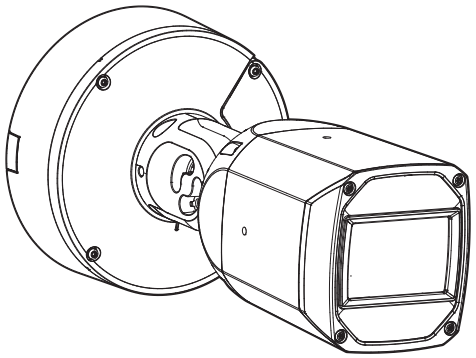

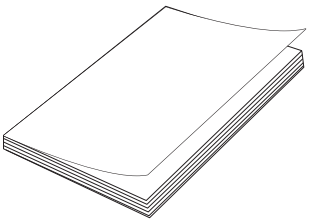

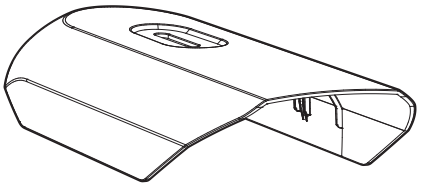

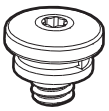

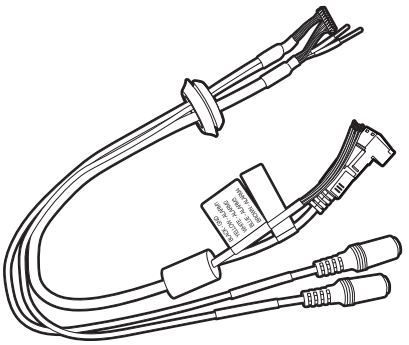

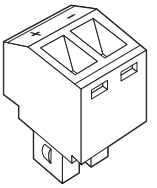

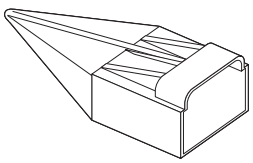

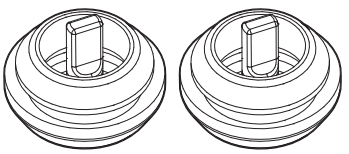

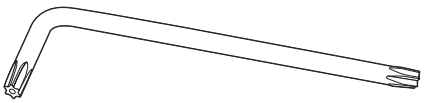

INSTALLATION

1

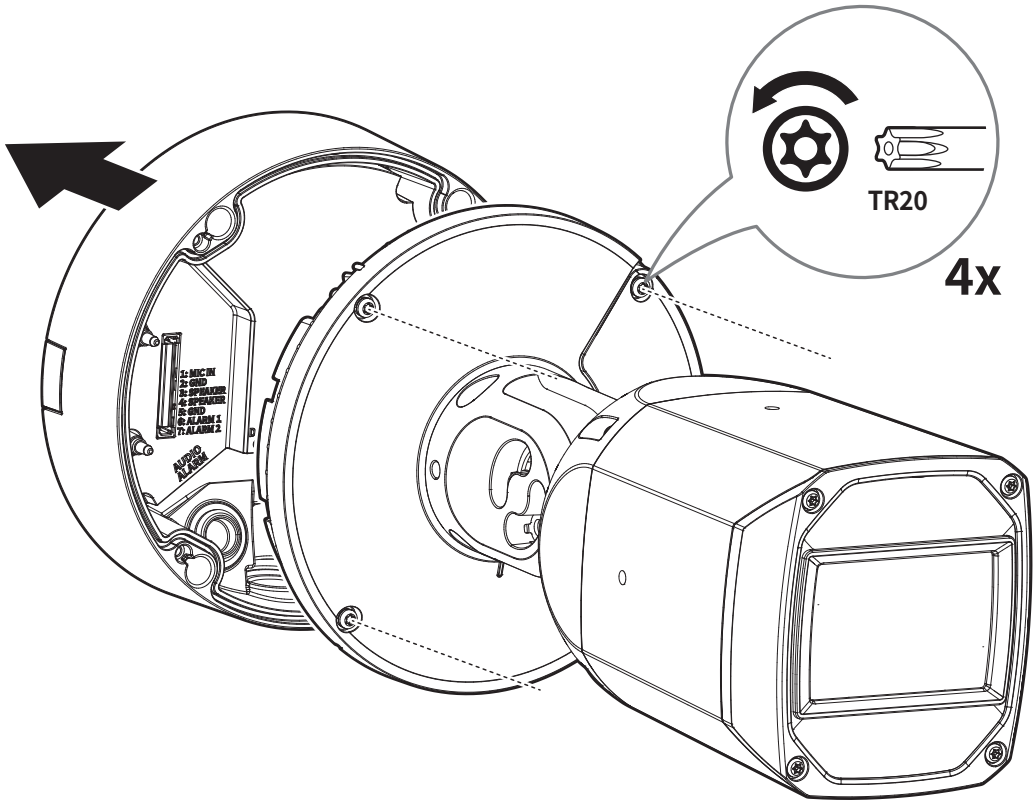

2

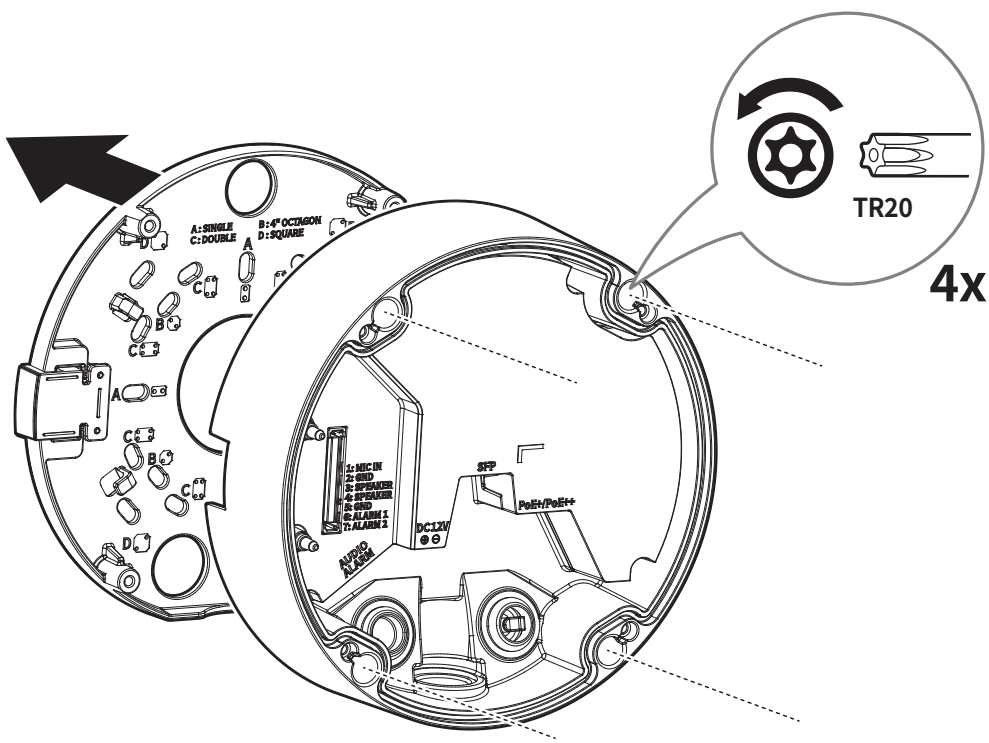

3 • 不包含:microSD 卡

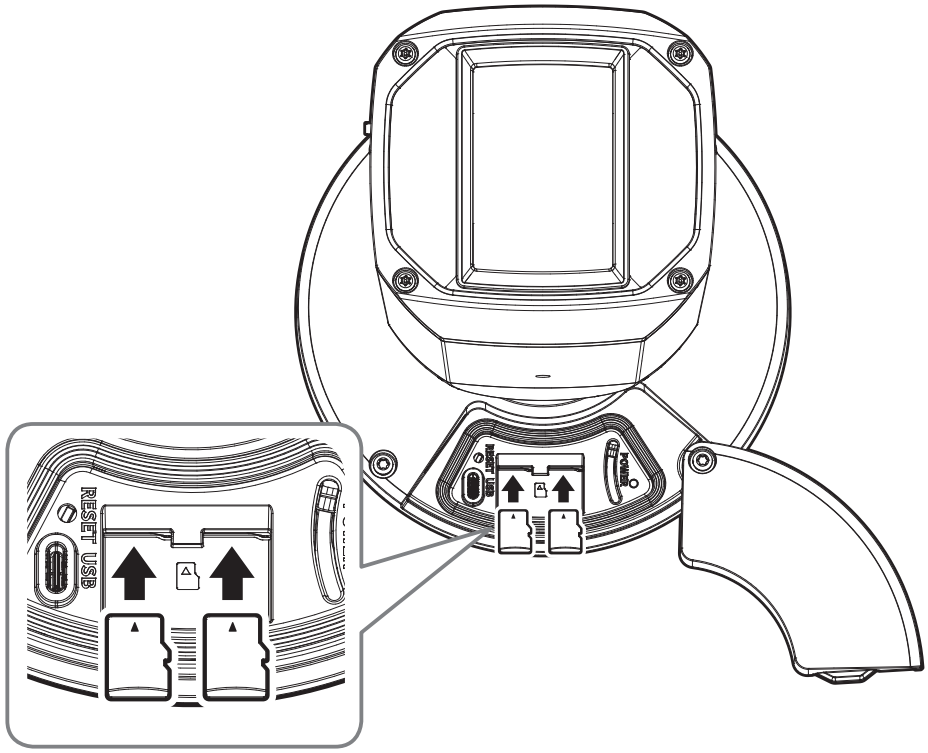

4 • 直接安裝於牆面／天花板

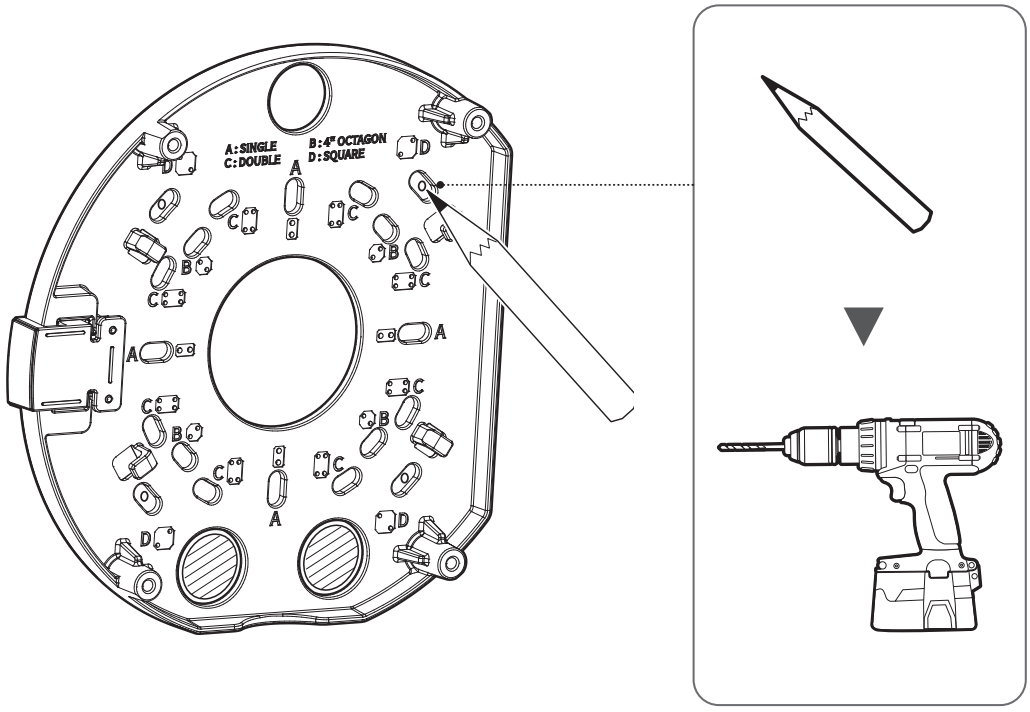

5

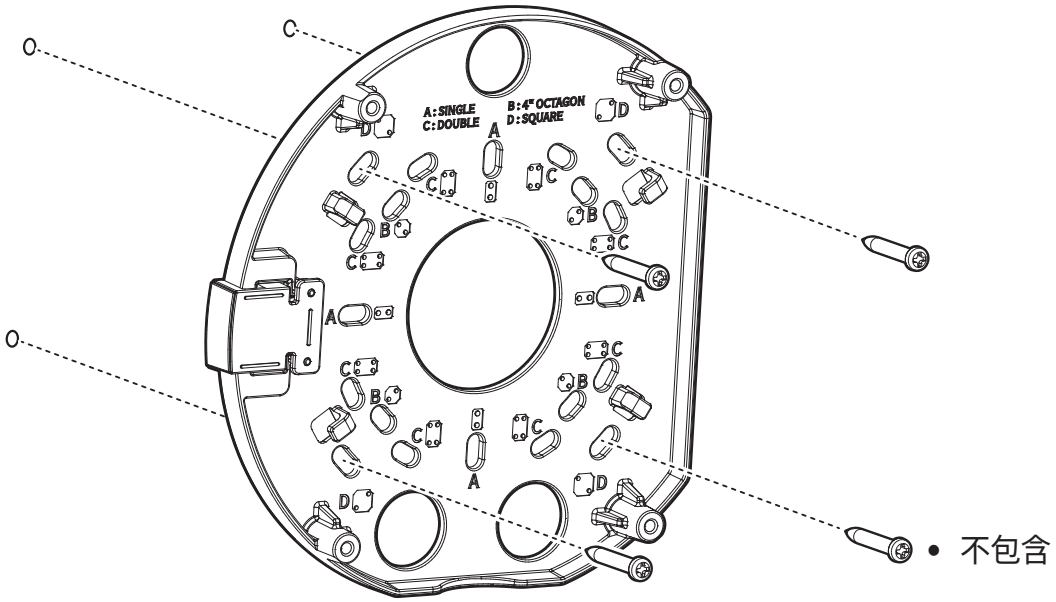
A:SINGLE
C:DOUBLE
B:4" OCTAGON
D:SQUARE
• 不包含

6

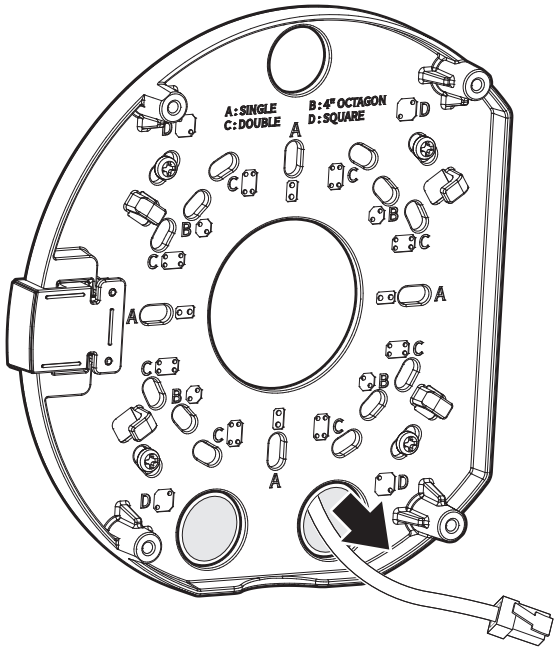
A:SINGLE
C:DOUBLE
B:4" OCTAGON
D:SQUARE

7-1

• 使用導管進行安裝

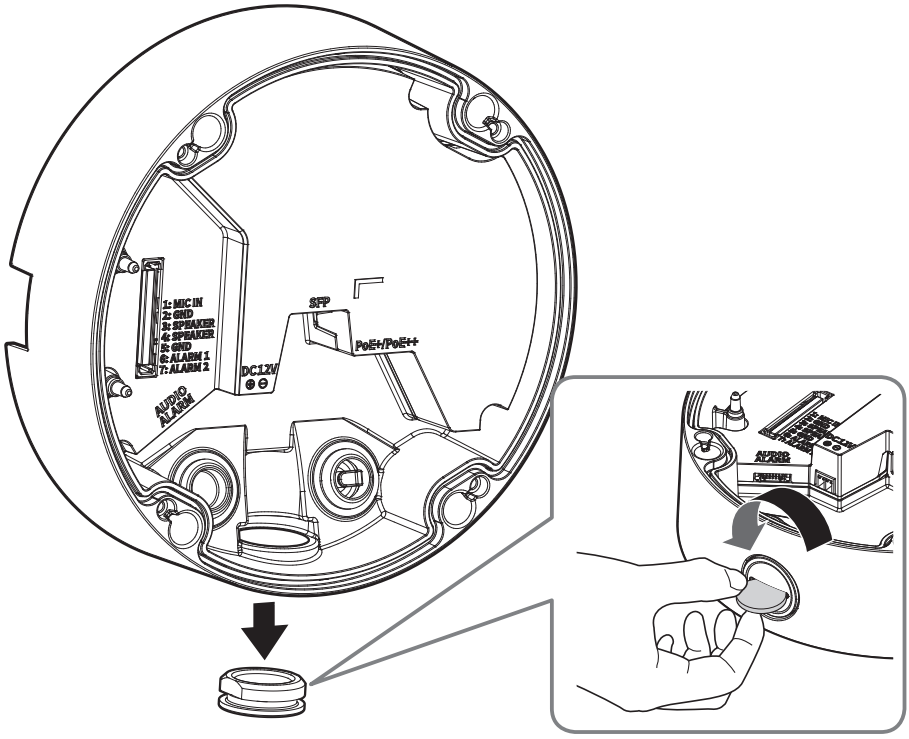

7-2

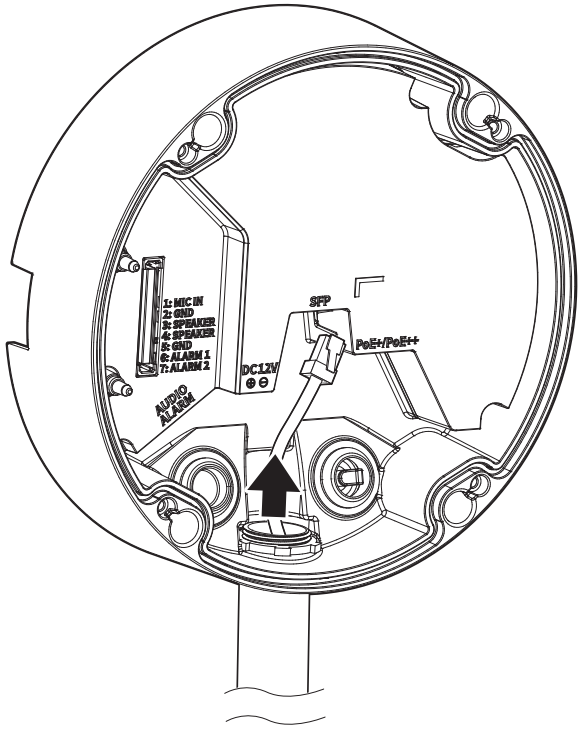

8

- 安裝網路纜線

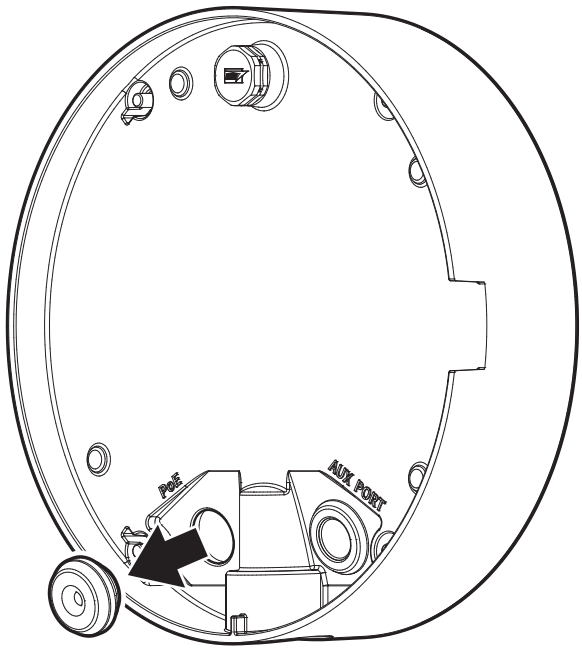

9

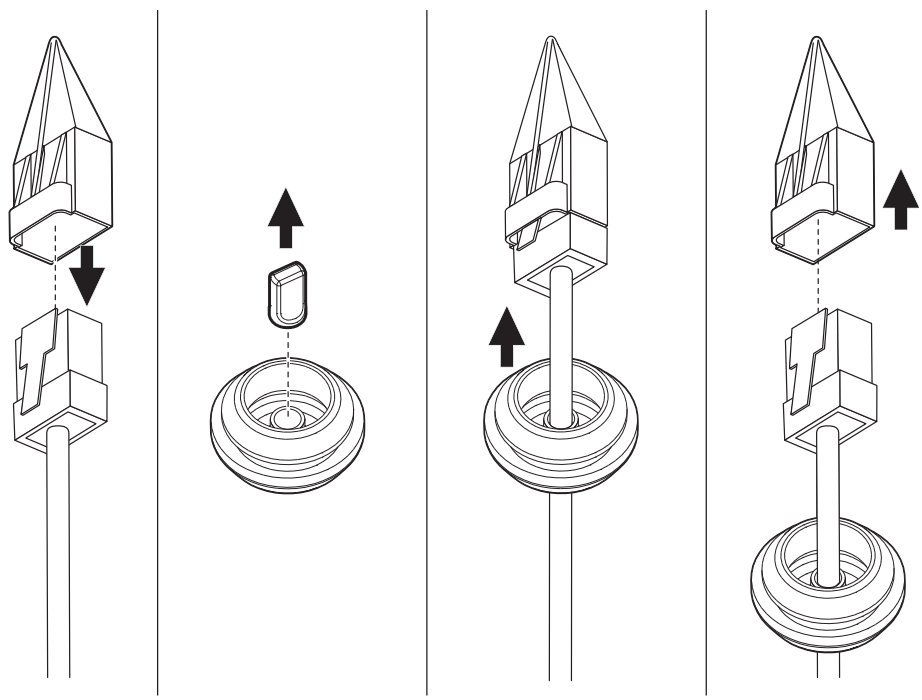

10

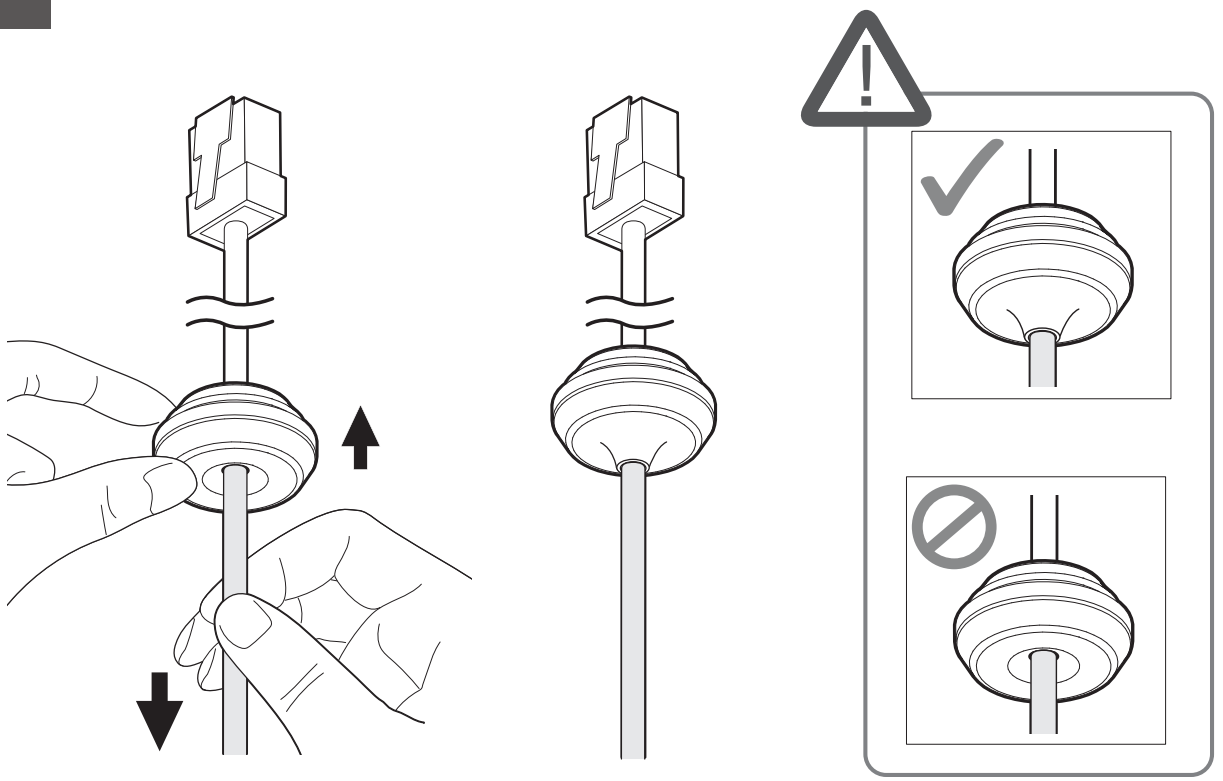

11

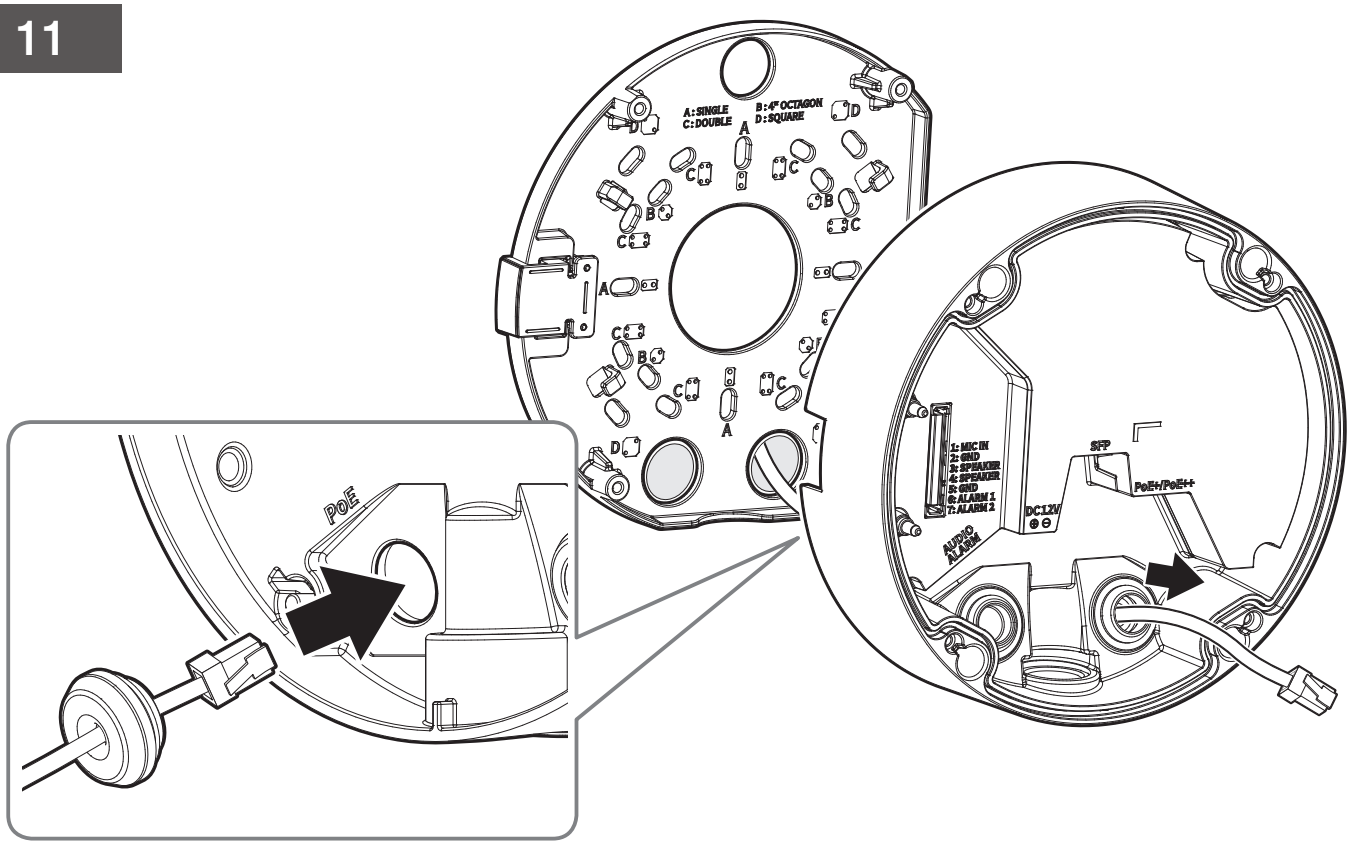
A: SINGLE
C: DOUBLE
B: 4" OCTAGON
D: SQUARE
PoE
1: MIC IN
2: GND
3: SPEAKER
4: SPEAKER
5: GND
6: ALARM 1
7: ALARM 2
AUDIO ALARM
DC12V
SFP
PoE+/PoE++

12 • 安裝電源(12V 直流電)/音訊/警報線材

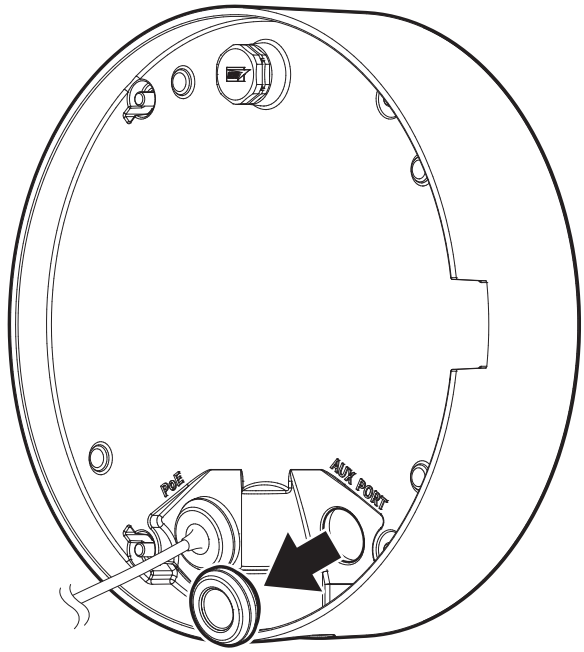

13

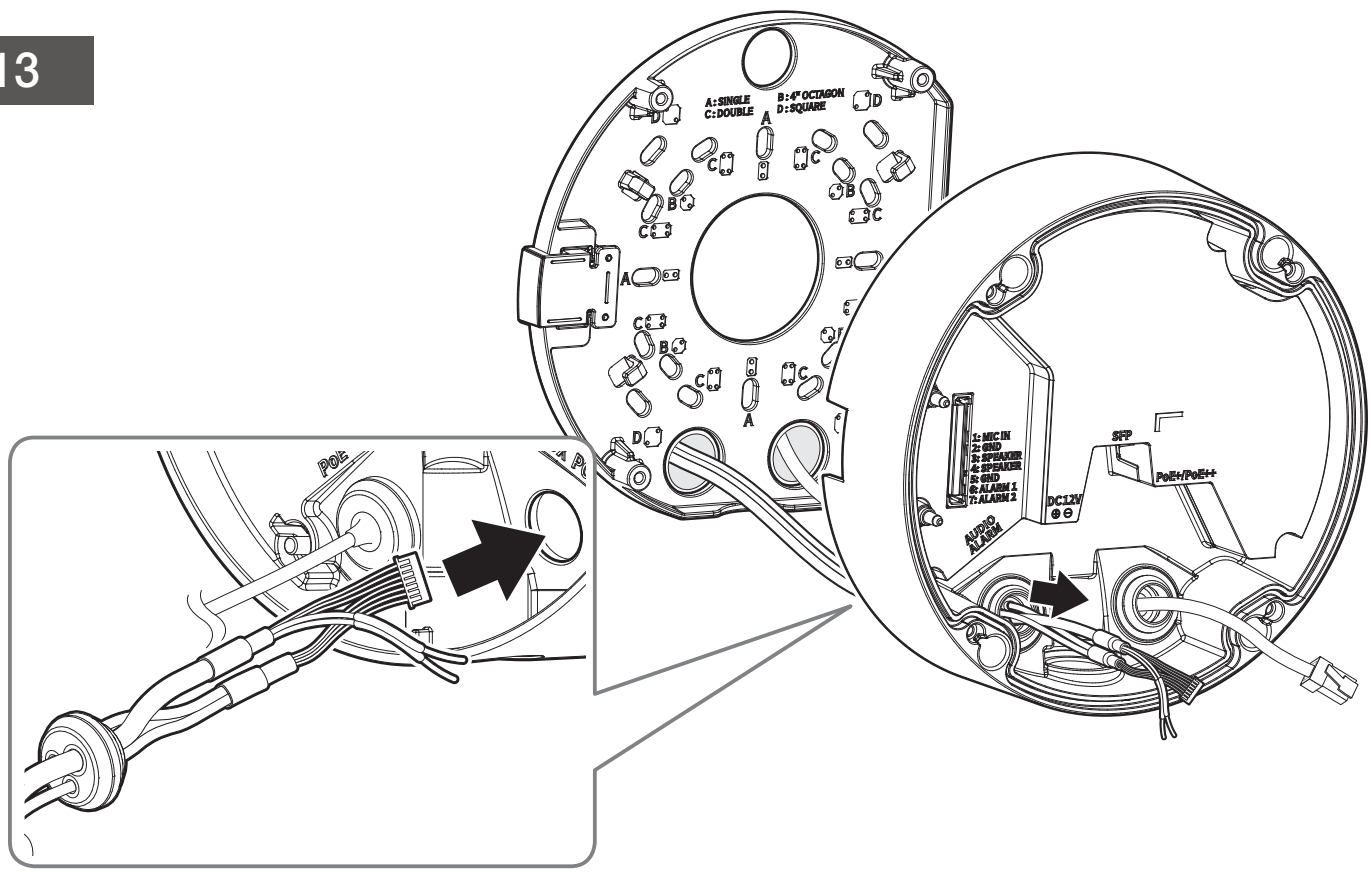

14 • 連接 12V 直流電源線

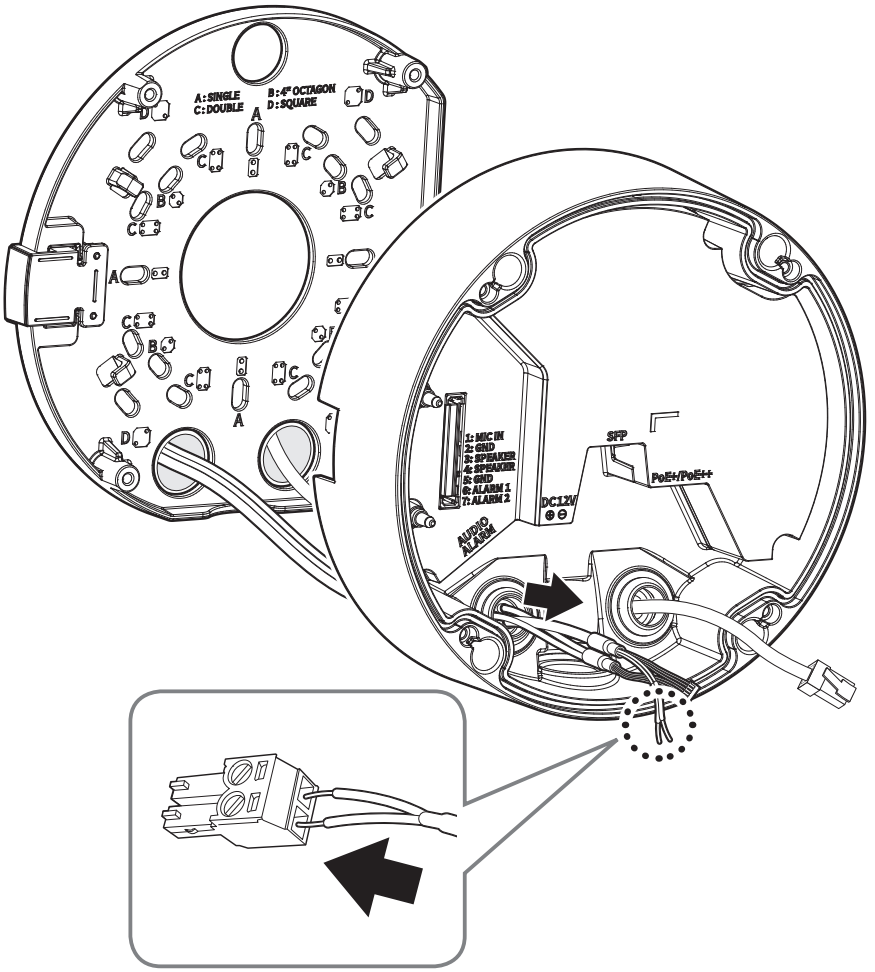

15

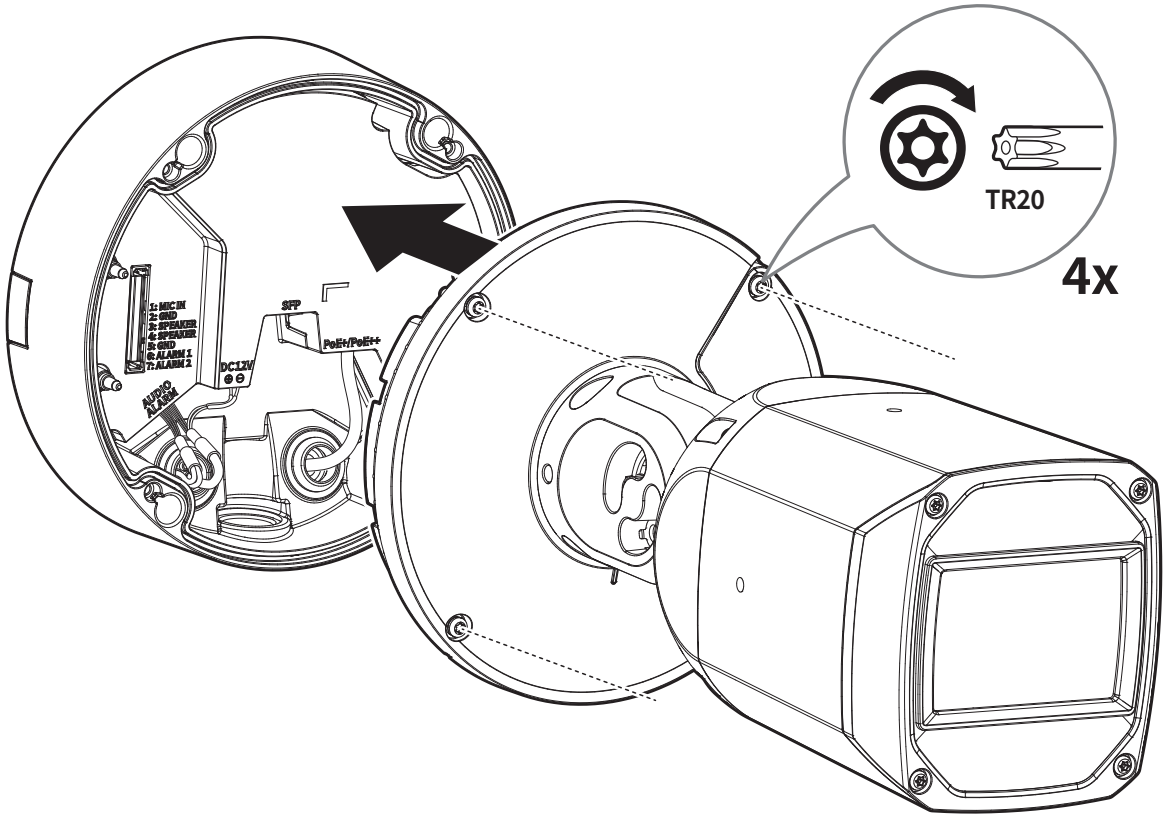
1: MIC IN
2: GND
3: SPEAKER
4: SPEAKER
5: GND
6: ALARM 1
7: ALARM 2
AUDIO ALARM
DC12V
SFP
PoE+/PoE++
TR20
4x

16

- 不包含:WiFi 轉接器、OTG 轉接頭

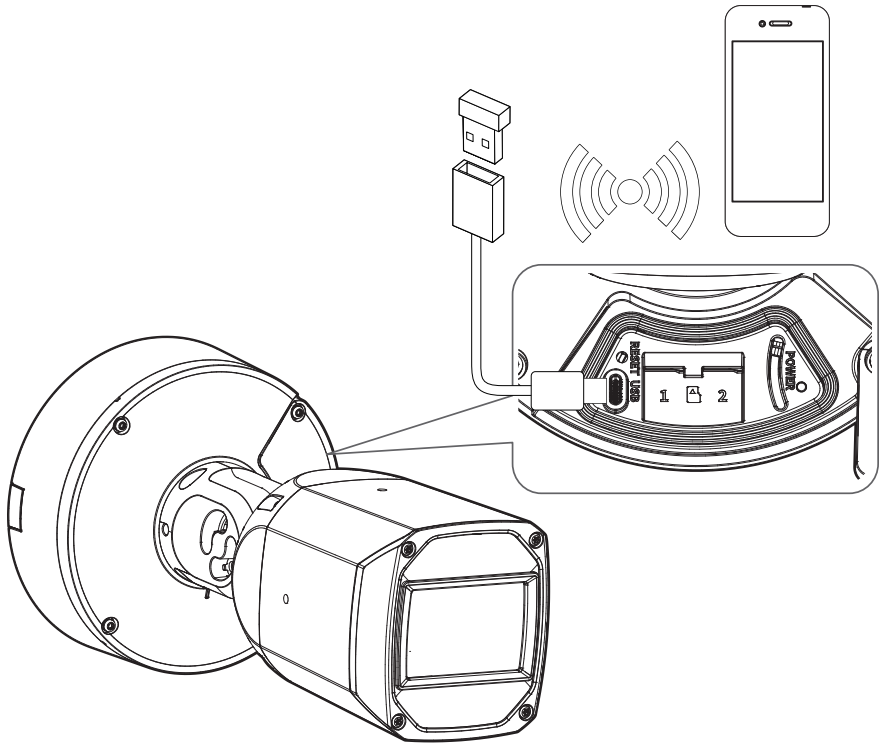

17

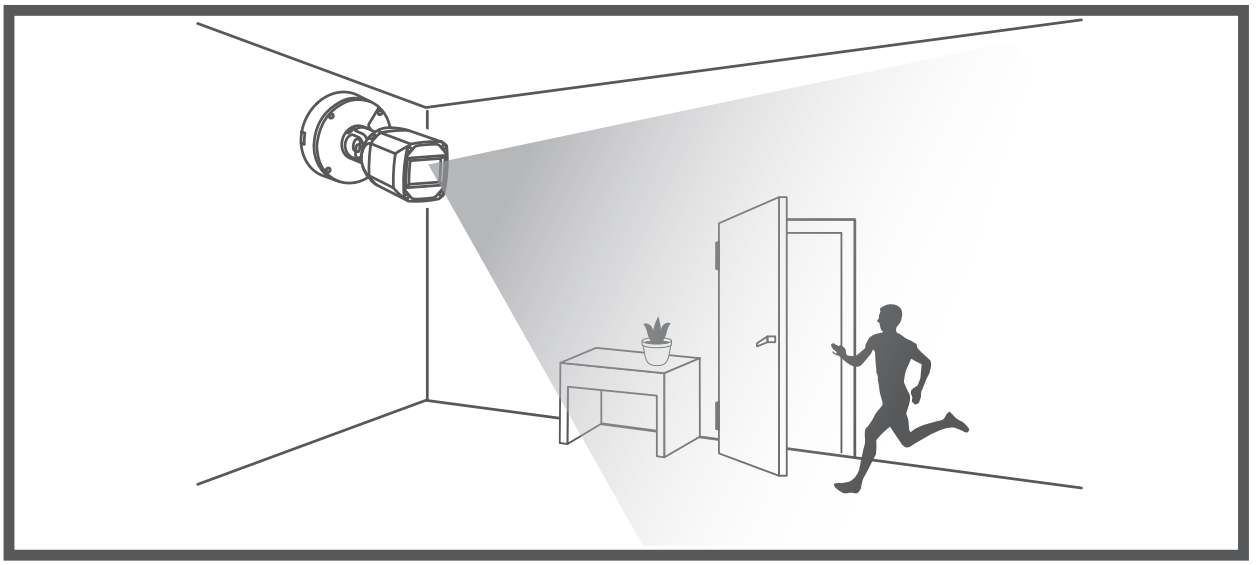

18-1

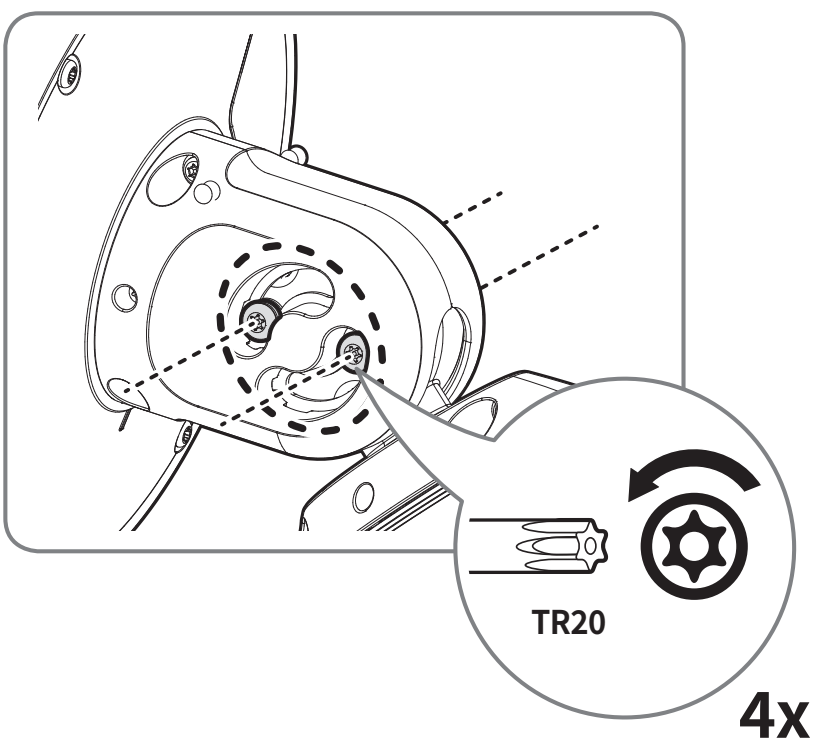

18-2

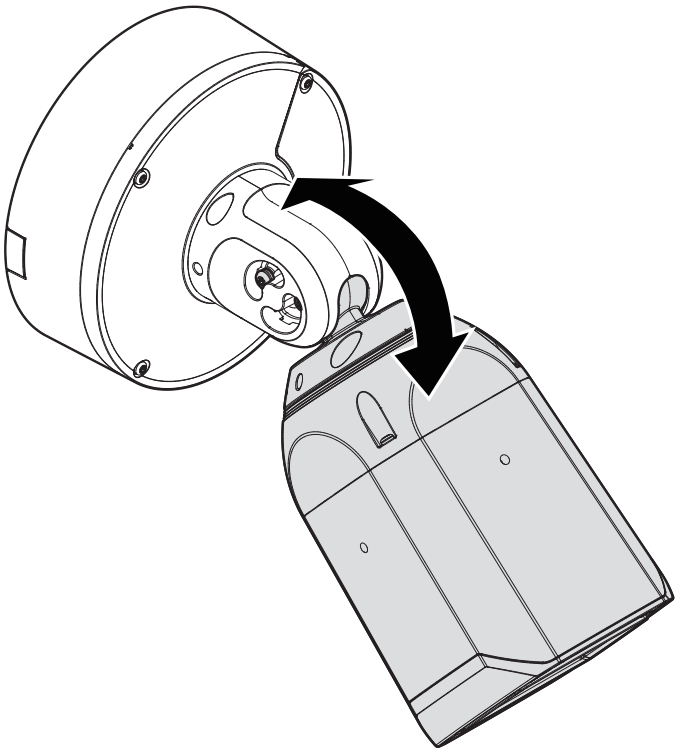

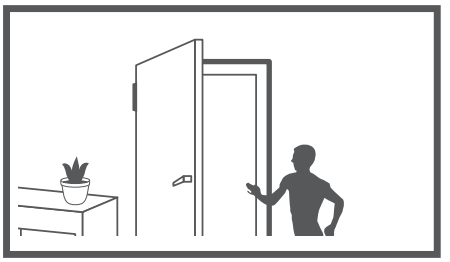

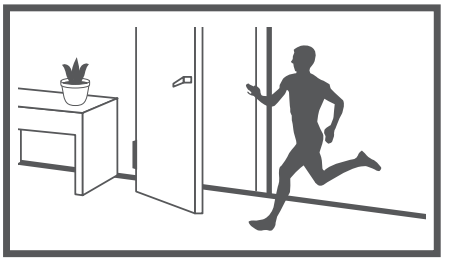

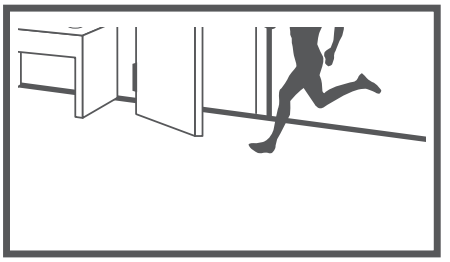

18-3

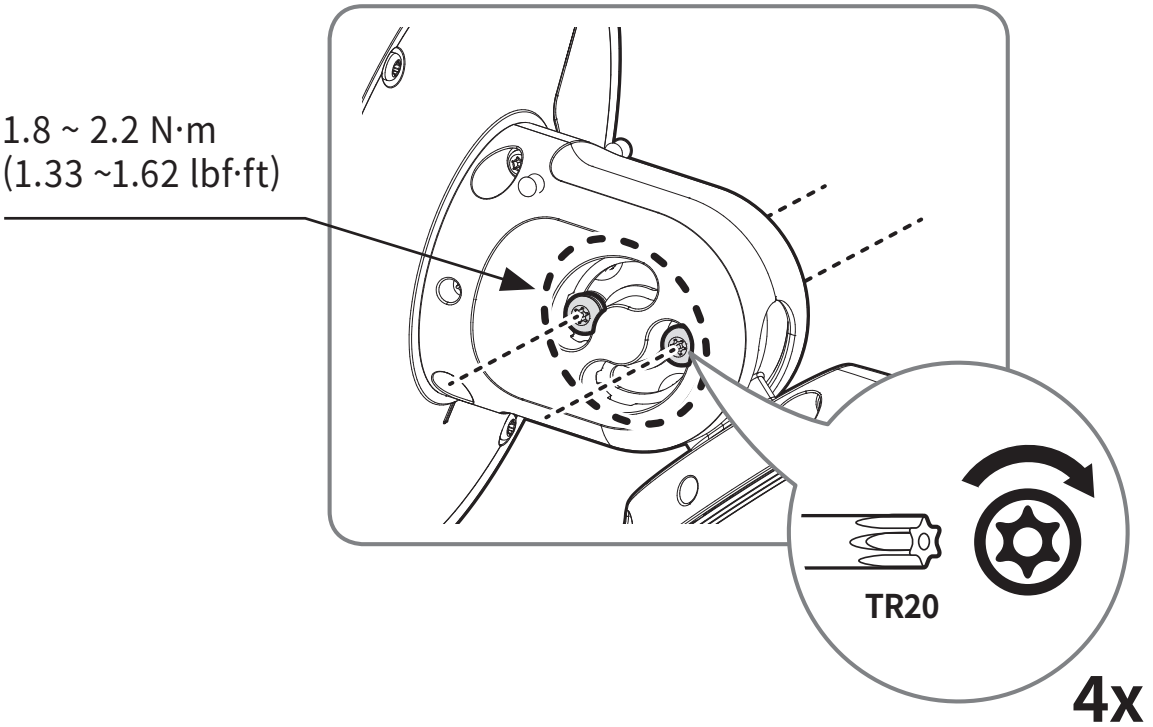

19-1

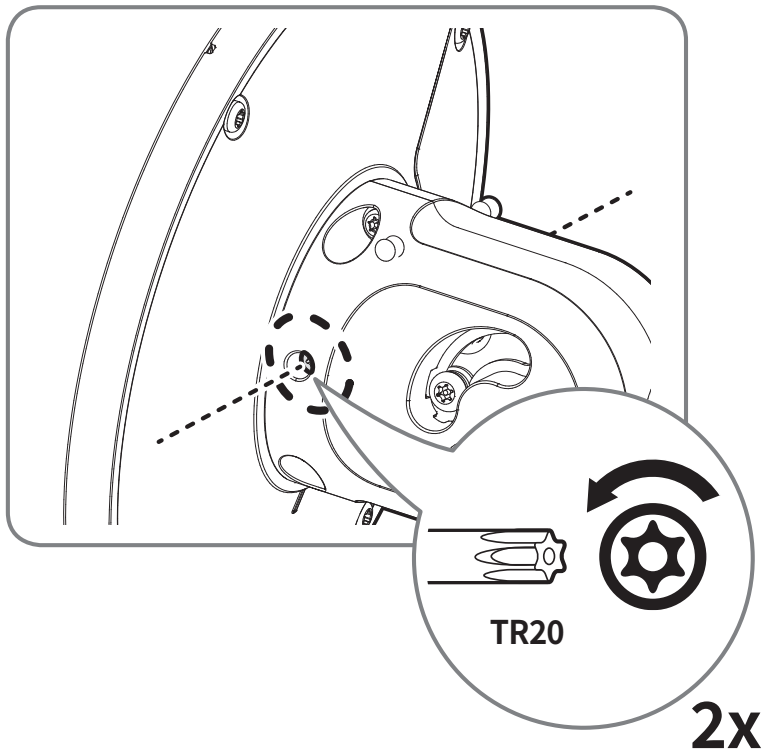

19-2

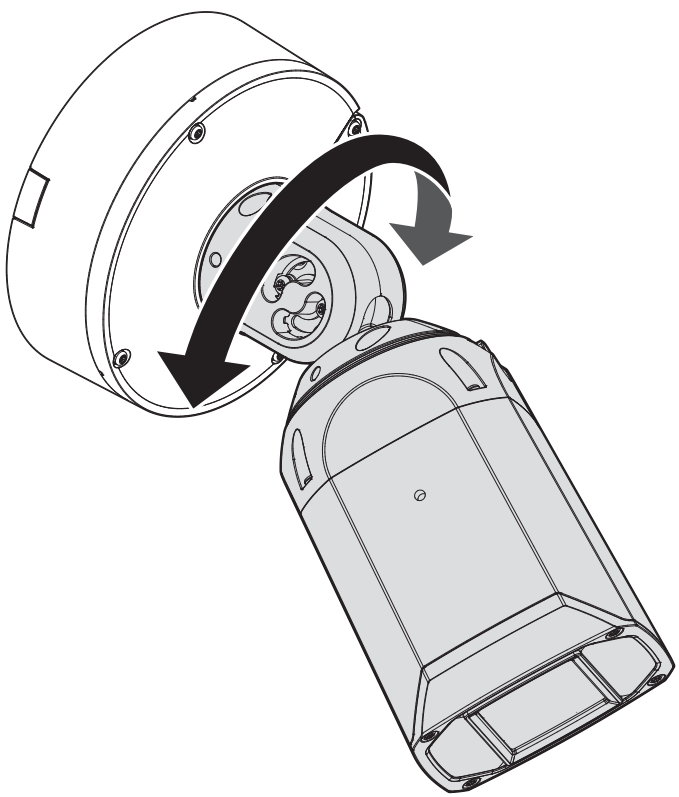

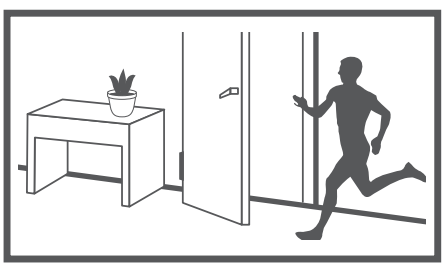

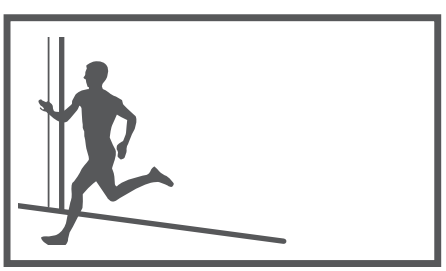

19-3

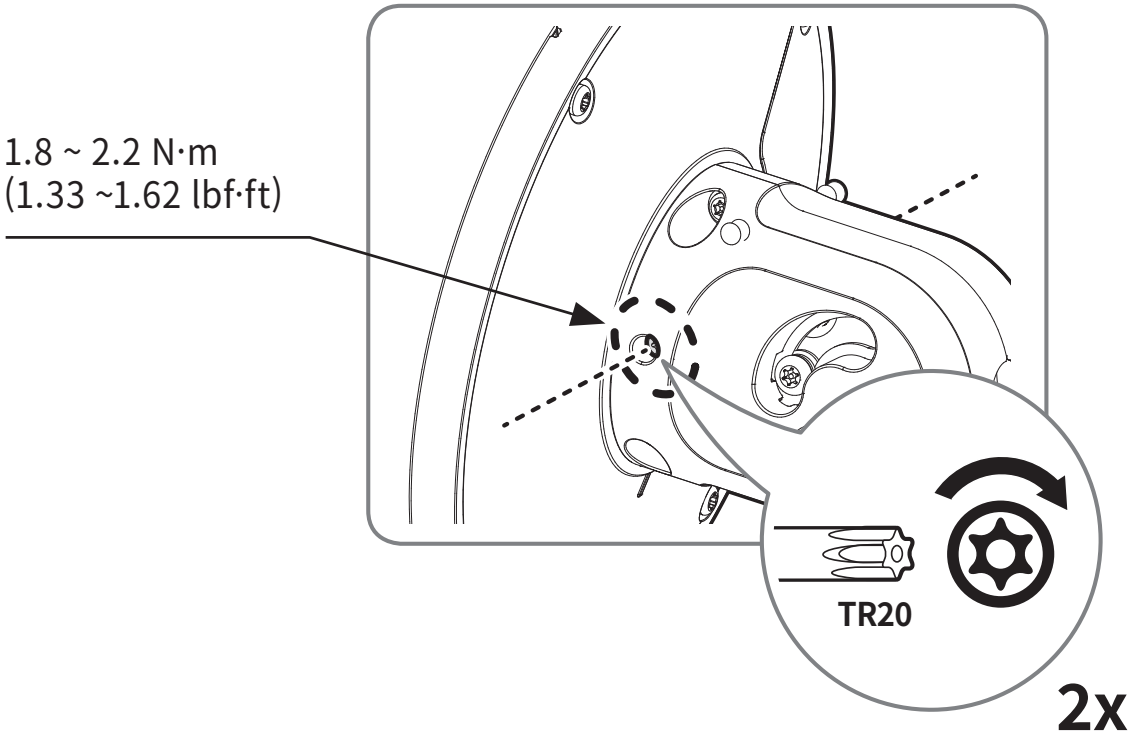

20-1

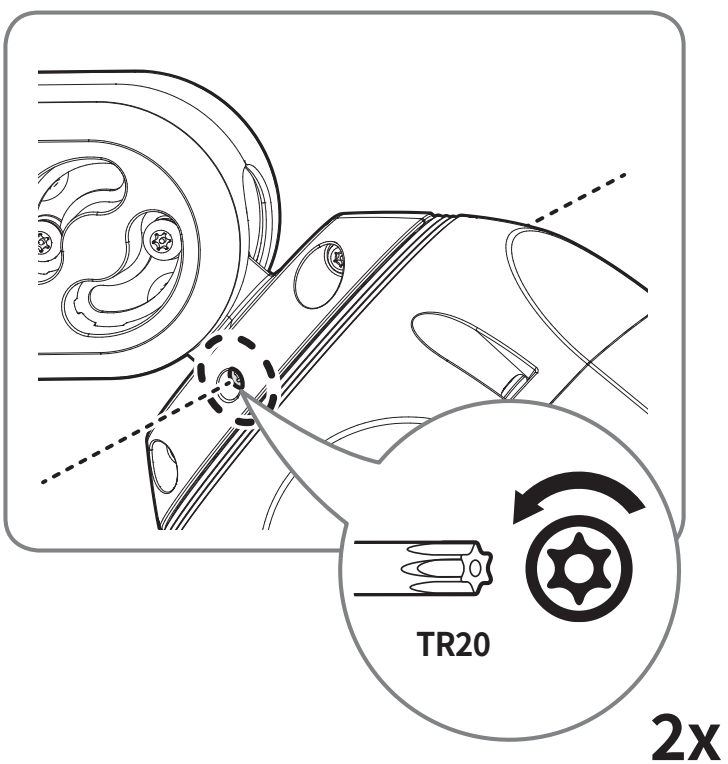

20-2

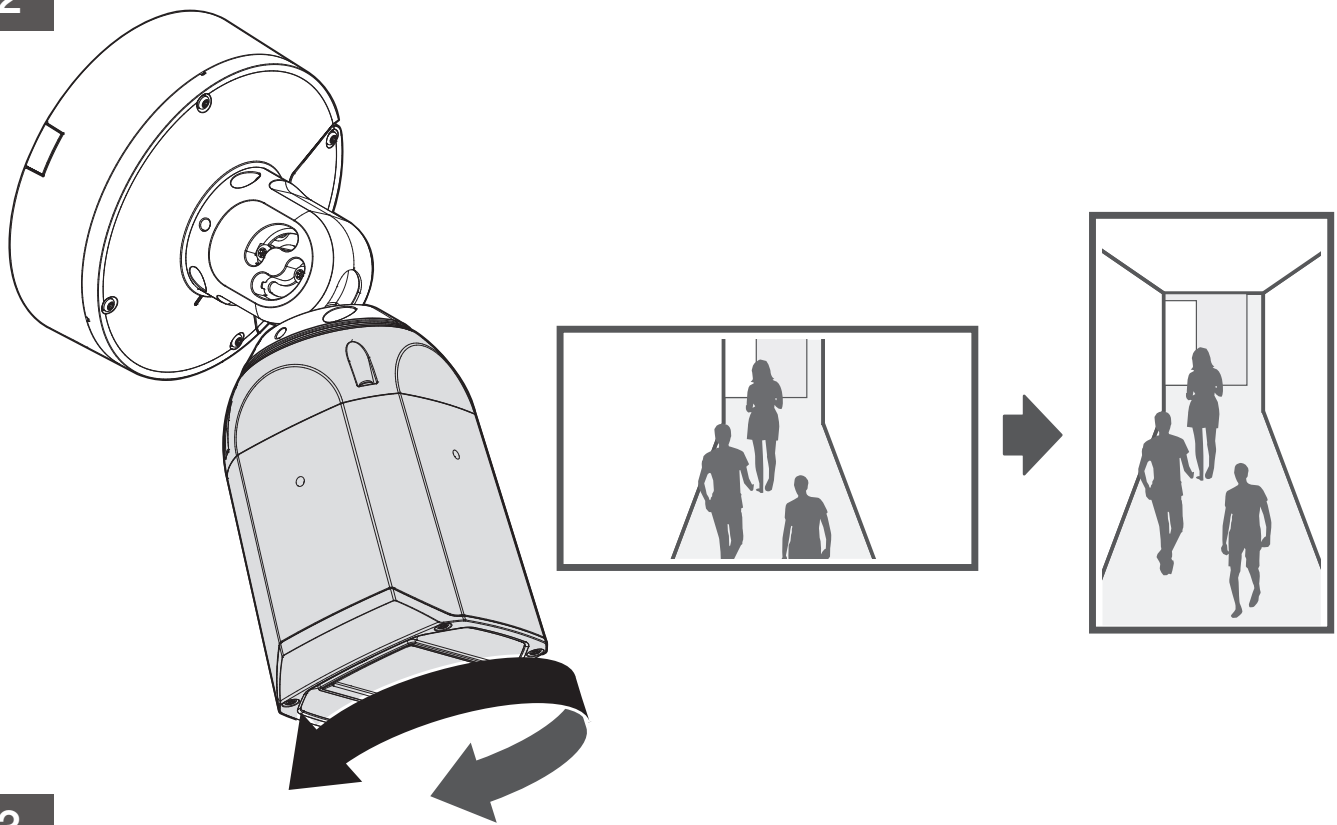

20-3

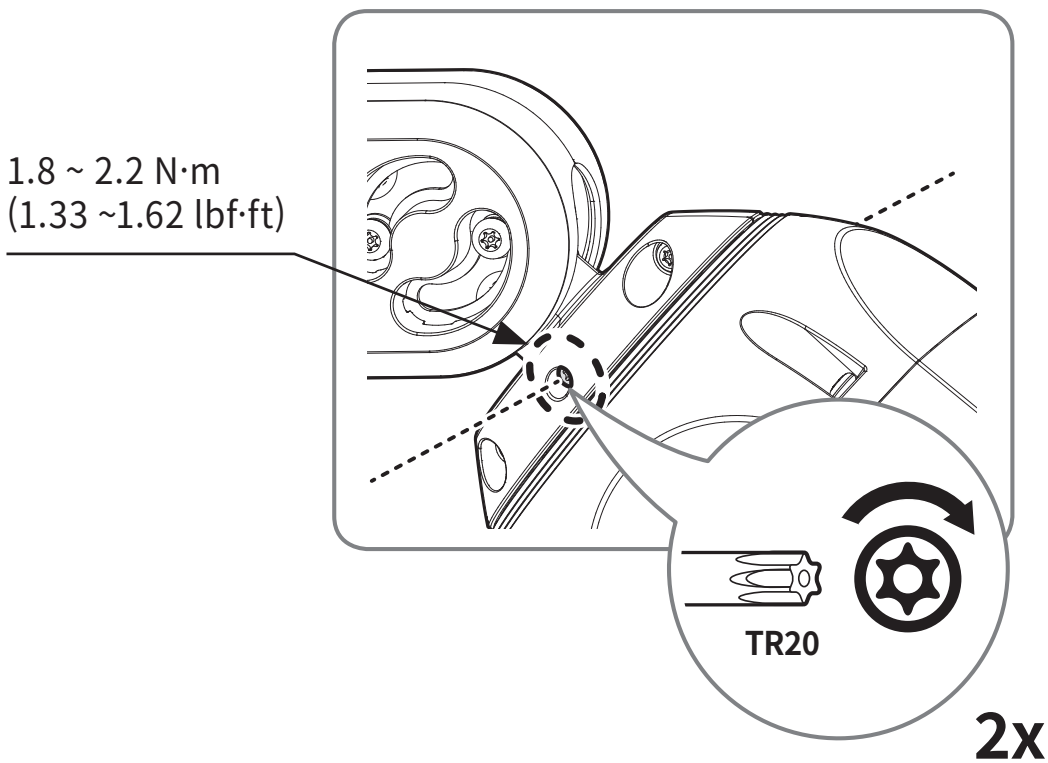

21

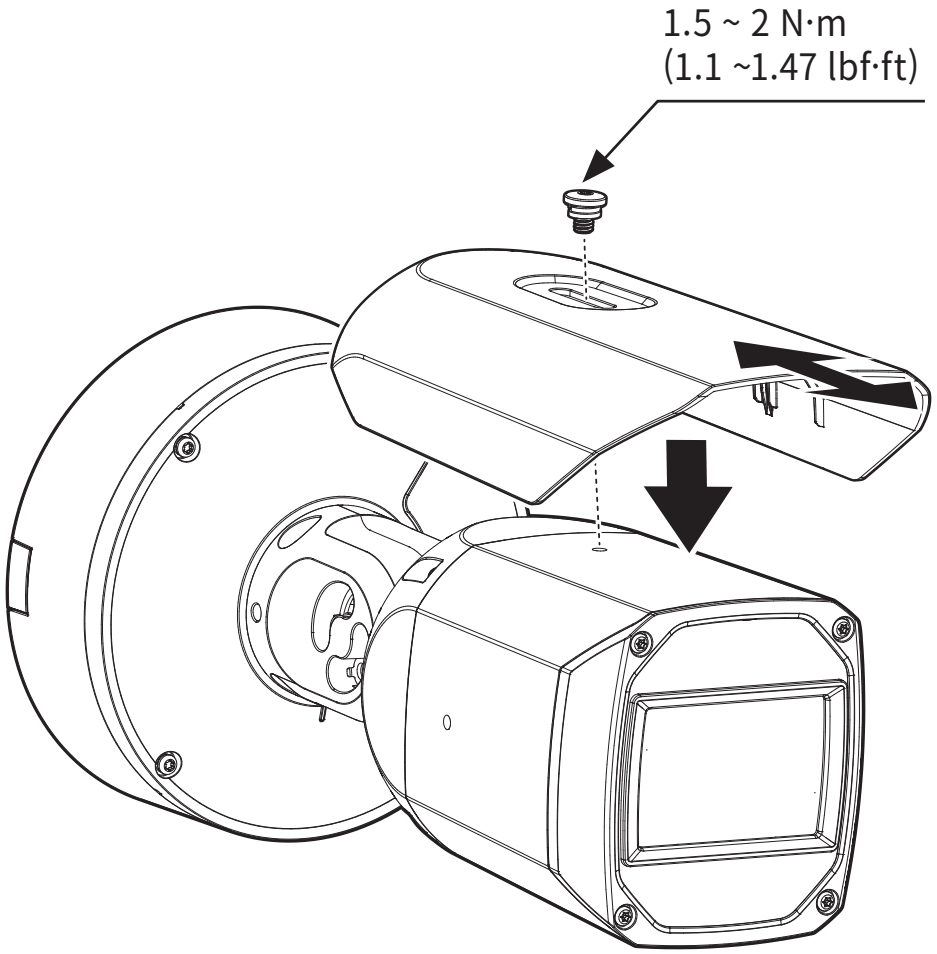

22

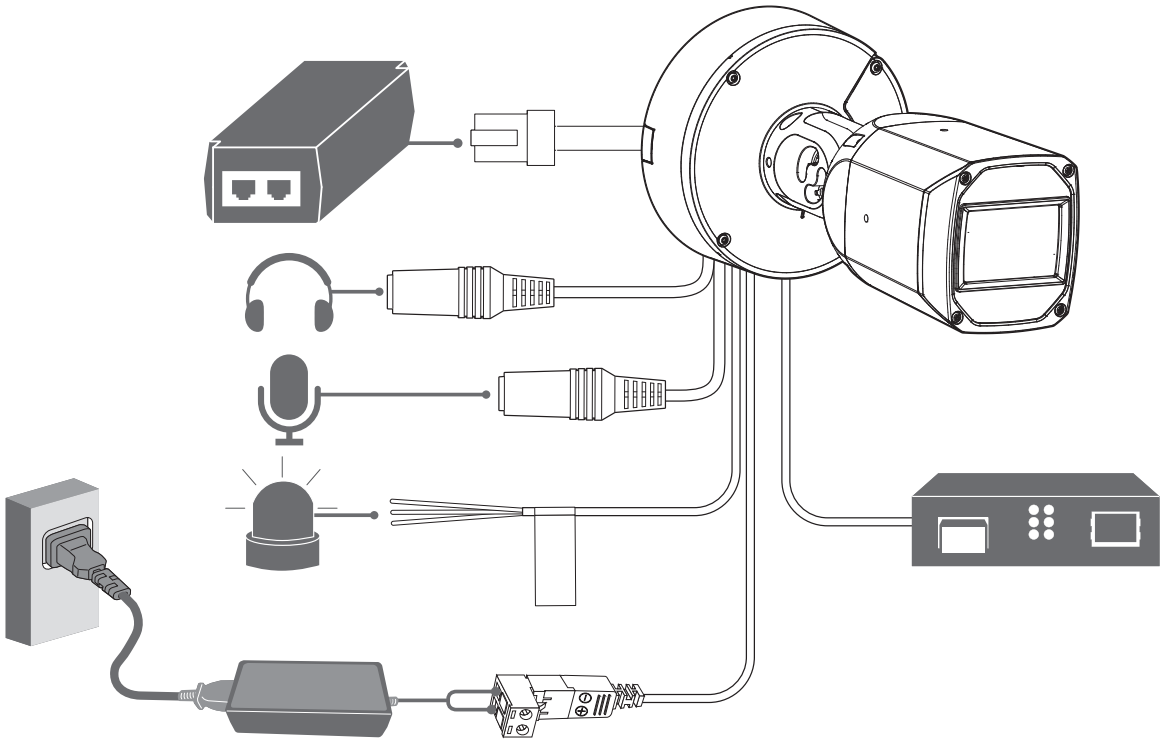

23

設定密碼

首次存取產品，須註冊登入密碼。

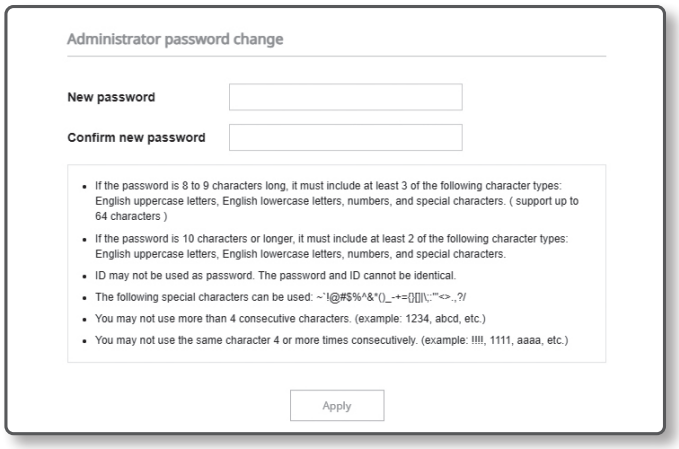

- 若新密碼長度為 8 到 9 個字元，須至少包含下列 3 種字元：大小寫字母、數字與特殊字元；若密碼長度超過 10 個字元，則須至少包含上述 2 種字元。(長度上限為 64 個字元)
  - 可使用的特殊字元：
    ~`!@#$%^&*( )_-+={ }[ ]|\;: ‘ “<>.,?/
- 密碼不可包含空白字元。
- 密碼和 ID 不得相同。
- 為強化安全性，請勿重複使用相同字元或鍵盤上相鄰鍵的字元作為密碼。
- 請務必牢記所設定的密碼。萬一忘記密碼，請按 [**RESET**] 按鈕重新設定本產品。

登入

只要存取攝影機，就會出現登入視窗。
請輸入使用者 ID 與密碼來存取攝影機。

1. 請在 <**User Name**> 輸入方塊中輸入「**admin**」。
2. 請在 <**Password**> 輸入欄位中輸入密碼。
3. 按一下 [**Sign in**]。

連線至 WIFI

設定攝影機

1. 將 OTG 公接頭 (Type C) 與 WiFi 轉接器連接至 USB Type-C 連接埠。

設定智慧型手機

1. 安裝 Wisenet Installation 應用程式。
2. 開啟 WiFi 後，選取攝影機 SSID。
3. 執行 Wisenet Installation 應用程式。
4. 登入攝影機，系統便會連接視訊畫面。
5. 可在透過智慧型手機觀看視訊時，調整拍攝角度。

HEVC Advance™
Covered by patents at patentlist.accessadvance.com

microSD, microSDHC, and microSDXC Logos are trademarks of SD-3C LLC. microSD, microSDHC, microSDXC are trademarks or registered trademarks of SD-3C, LLC in the United States, other countries or both.

EAC

Подлежит использованию по назначению
в нормальных условиях
Срок службы : 7 лет.

Türkiye Distribütörü

EDS Elektronik Destek Sanayi ve Ticaret Ltd. Şti.
Meclis Mah. Teraziler Cad. Hayran Sk. (Eskisi Kılıç Sk.) No: 4 Sancaktepe / İstanbul / Türkiye
Tel +90.216.313.25.15

ENTES ELEKTRONİK CİHAZLAR İMALAT VE TİC. A.Ş.
Dudullu Org.San.Bölg. 1. Cad. No:23 34776 Ümraniye / İstanbul / Türkiye
Tel +90.216.313.01.10

TEKNOMAKS TEKNOLOJI / TEKNOMAKS BILISIM
MERDİVENKÖY MAH.DİKYOL SOK. BUSINESS ISTANBUL No:2, Kat:7, D:B67, 34732 Kadıköy / İstanbul / Türkiye
Tel +90.212.217.54.22

Cihazın Ticaret Bakanlığınca önerilen ortalama ömrü
Cihazın EEE yönetmeliklerine uygun olduğuna benzer beyan

Hanwha Vision