Hanwha Vision

网络摄像机
简介

TNO-A45080R
TNO-A45090R

CE

Important
Please check 'Manuals' from our website, before connecting to the Supply,
https://www.hanwhavision.com/en/download-data/

Warranty
Please check "Product warranty information" from our website.
https://www.hanwhavision.com/en/support/warranty/

Videos processed by surveillance equipment cannot be accessed arbitrarily by the manufacturer.

We recommend to use the officially compatible VMS version or latest Hanwha NVR version when integrating with VMS or Hanwha NVR.

eco
RoHS compliant

Hanwha Vision cares for the environment at all product manufacturing stages, and is taking measures to provide customers with more environmentally friendly products.
The Eco mark represents Hanwha Vision's devotion to creating environmentally friendly products, and indicates that the product satisfies the EU RoHS Directive.

Correct Disposal of This Product (Waste Electrical & Electronic Equipment)

(Applicable in the European Union and other European countries with separate collection systems)

This marking on the product, accessories or literature indicates that the product and its electronic accessories (e.g. charger, headset, USB cable) should not be disposed of with other household waste at the end of their working life. To prevent possible harm to the environment or human health from uncontrolled waste disposal, please separate these items from other types of waste and recycle them responsibly to promote the sustainable reuse of material resources.

Household users should contact either the retailer where they purchased this product, or their local government office, for details of where and how they can take these items for environmentally safe recycling.

Business users should contact their supplier and check the terms and conditions of the purchase contract. This product and its electronic accessories should not be mixed with other commercial wastes for disposal.

Correct disposal of batteries in this product

(Applicable in the European Union and other European countries with separate battery return systems.)

This marking on the battery, manual or packaging indicates that the batteries in this product should not be disposed of with other household waste at the end of their working life. Where marked, the chemical symbols Hg, Cd or Pb indicate that the battery contains mercury, cadmium or lead above the reference levels in EC Directive 2006/66. If batteries are not properly disposed of, these substances can cause harm to human health or the environment.

To protect natural resources and to promote material reuse, please separate batteries from other types of waste and recycle them through your local, free battery return system.

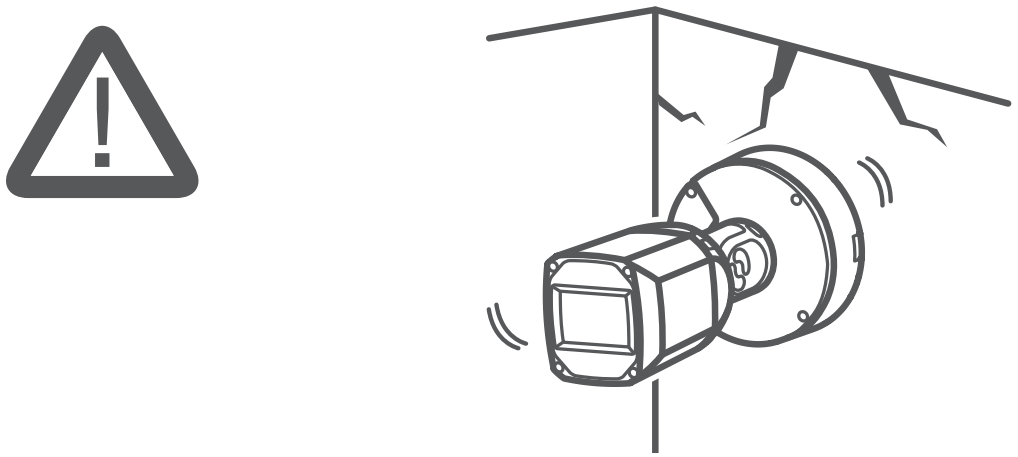

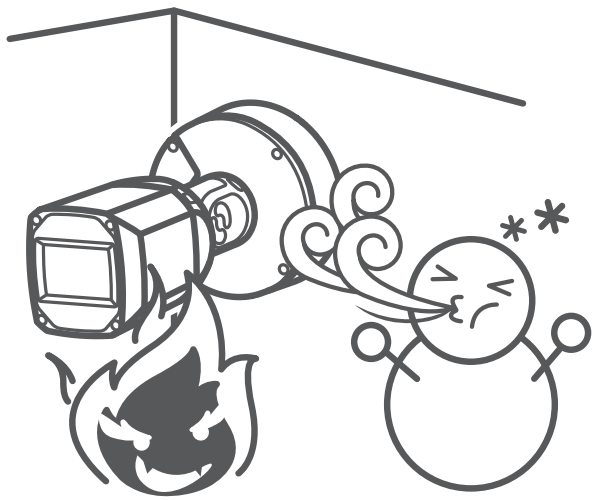

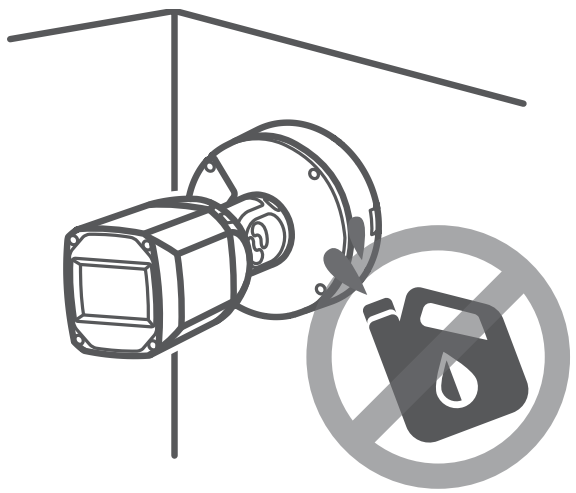

COMPONENT

产品组件可能因国家或地区而有所不同。

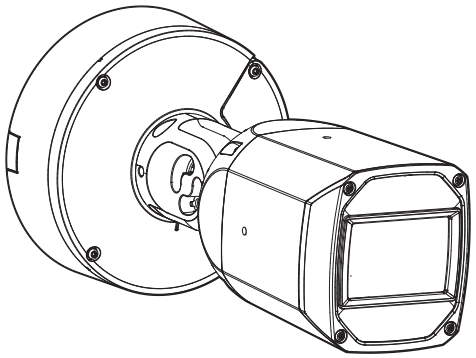

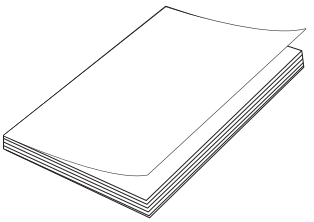

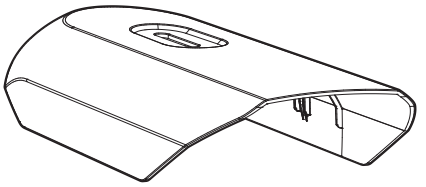

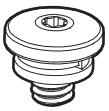

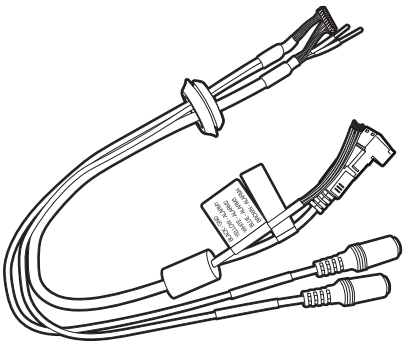

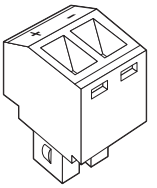

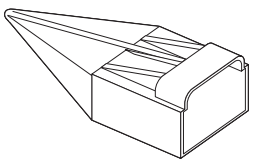

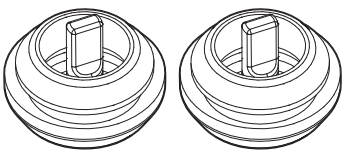

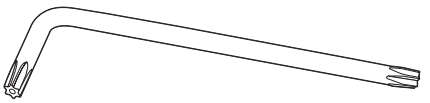

INSTALLATION

1

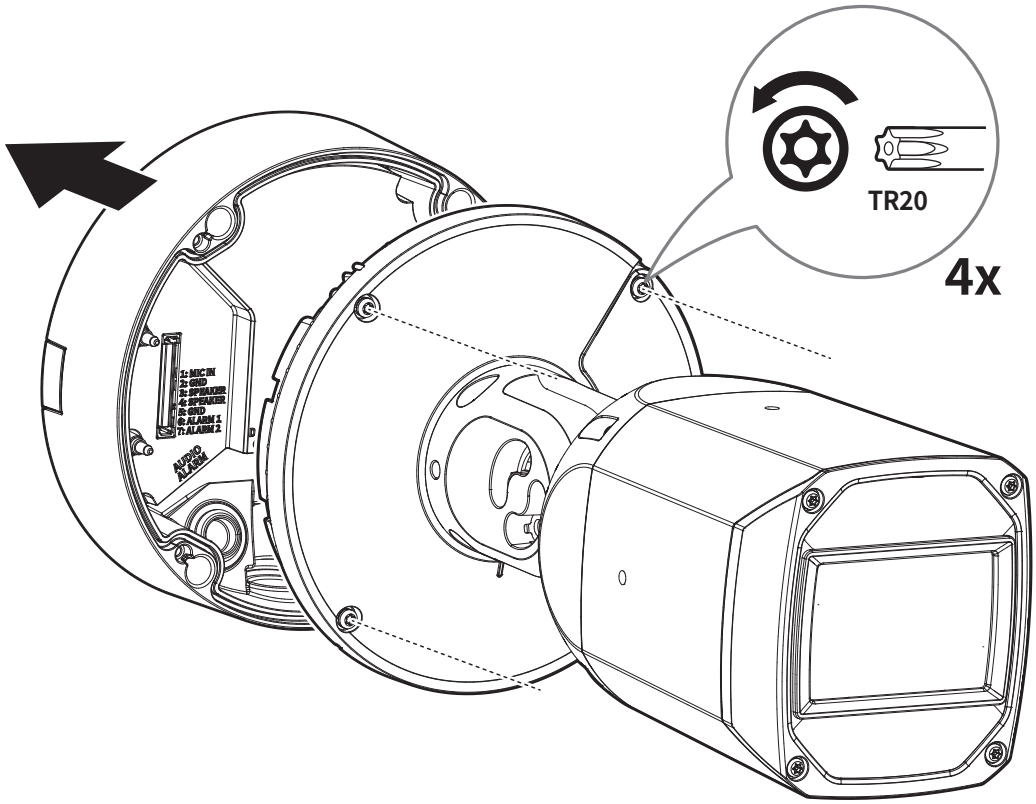

2

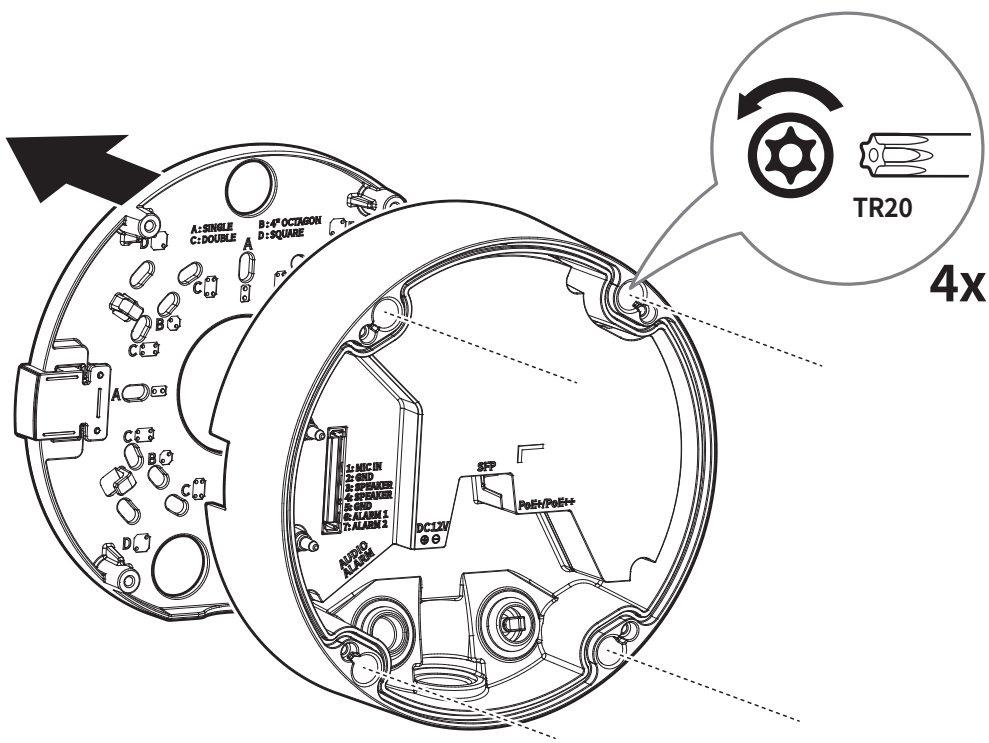

3 • 未包括：Micro SD 卡

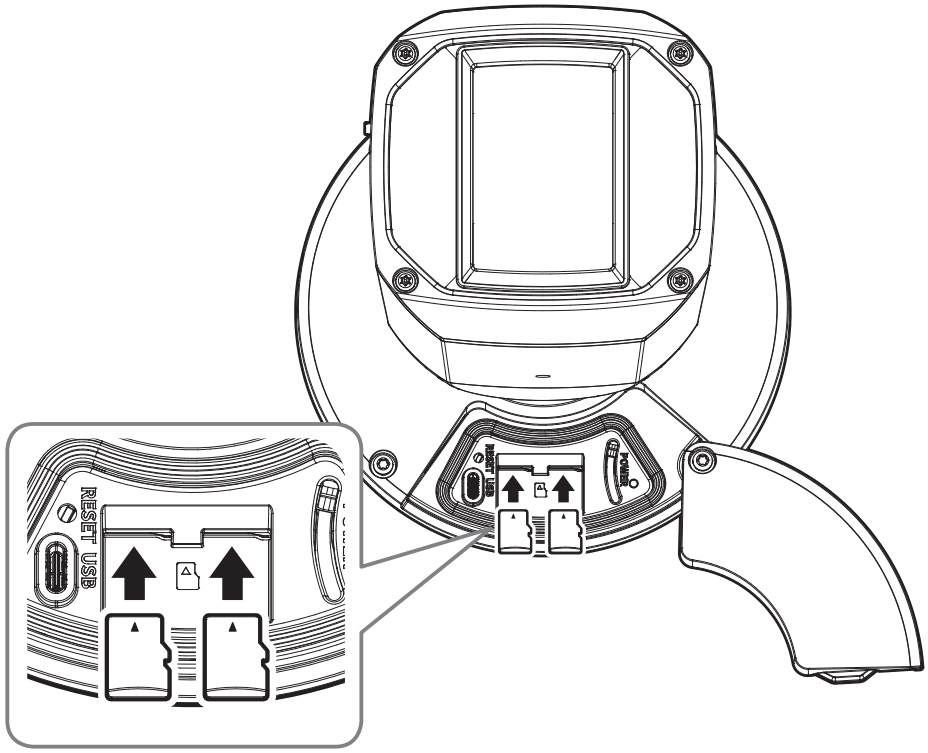

4 • 直接安装在墙壁/天花板上

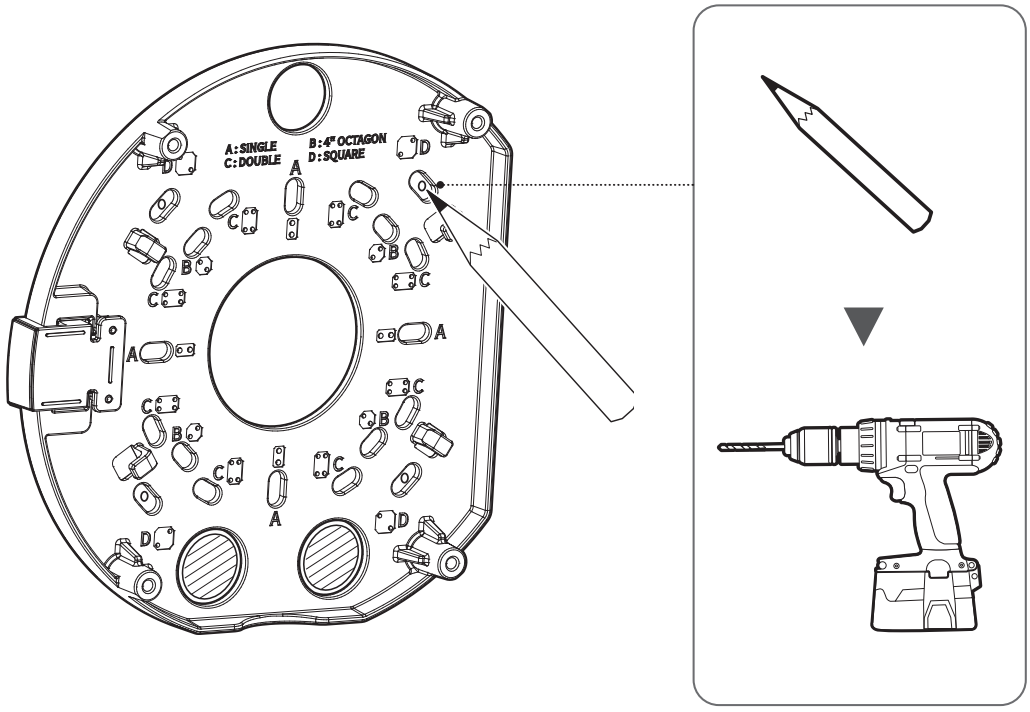

5

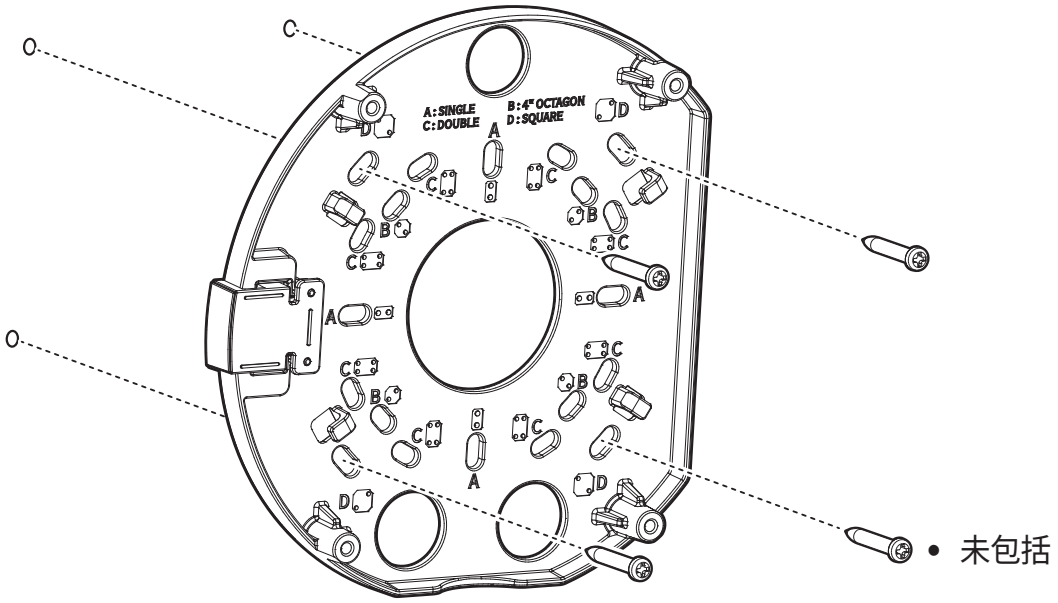
A:SINGLE
C:DOUBLE
B:4" OCTAGON
D:SQUARE
• 未包括

6

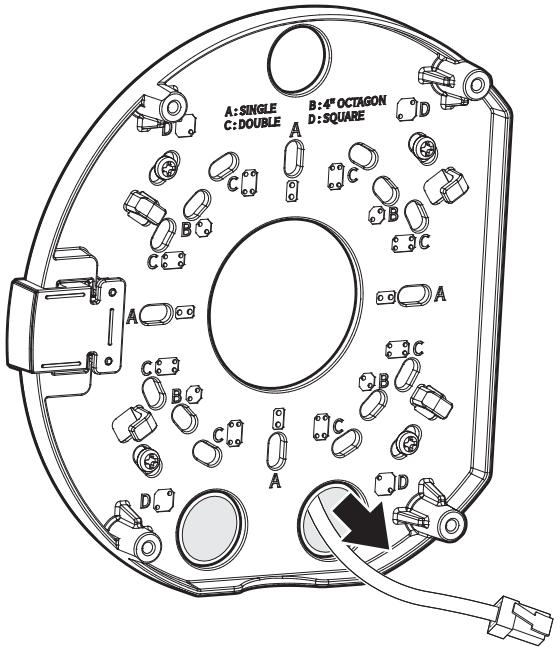
A:SINGLE
C:DOUBLE
B:4" OCTAGON
D:SQUARE

7-1

• 使用导管进行安装

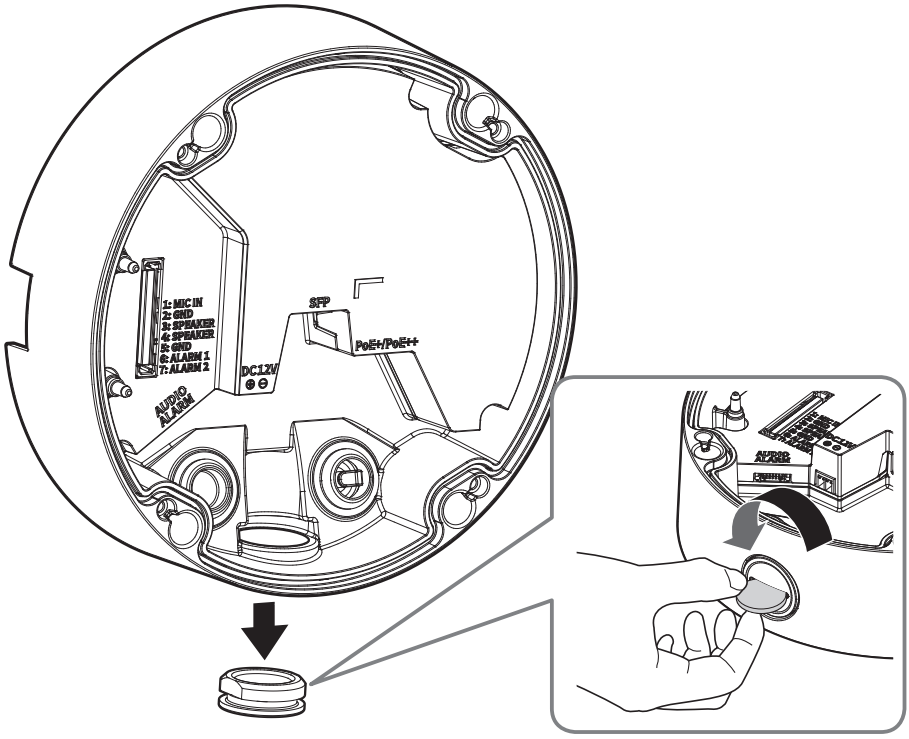

7-2

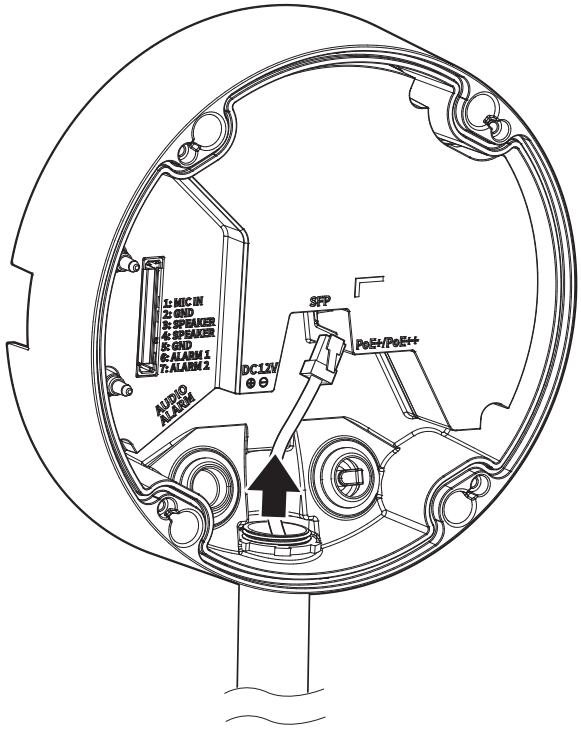

8 • 安装网线

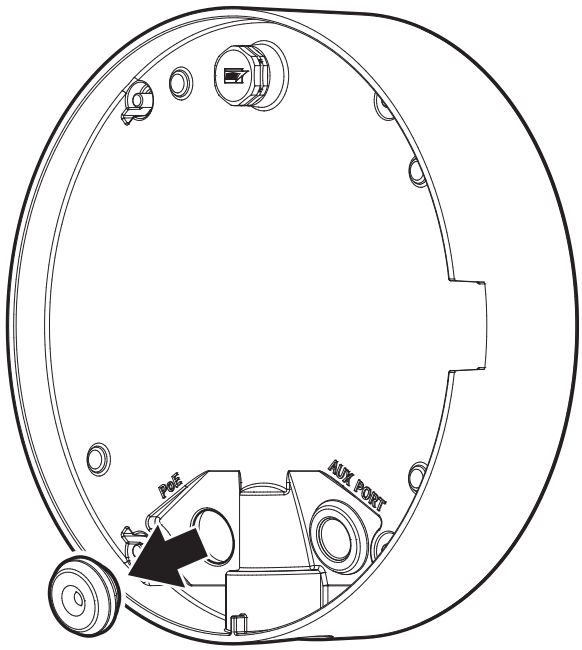

9

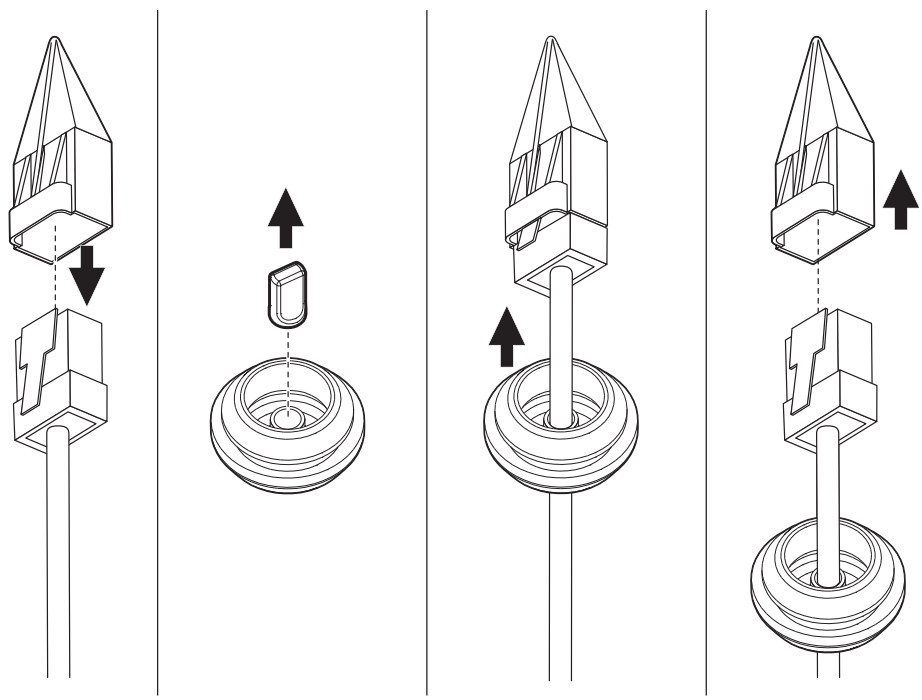

10

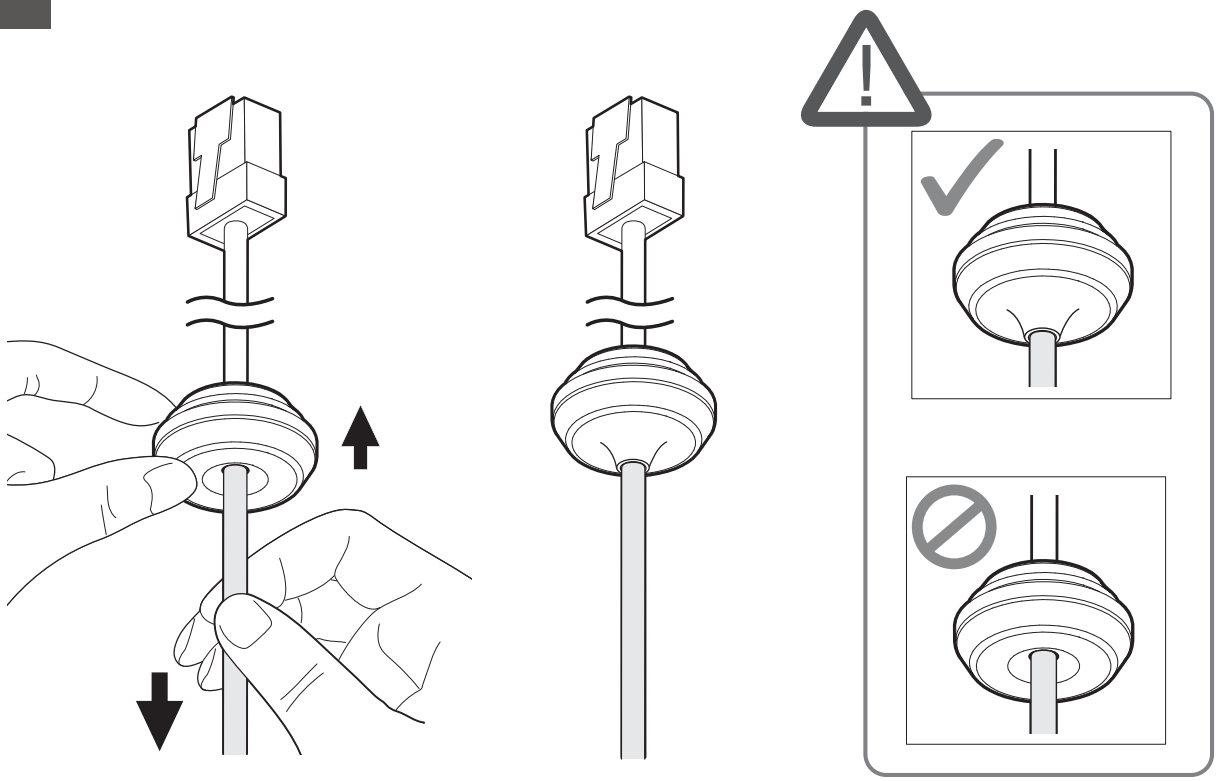

11

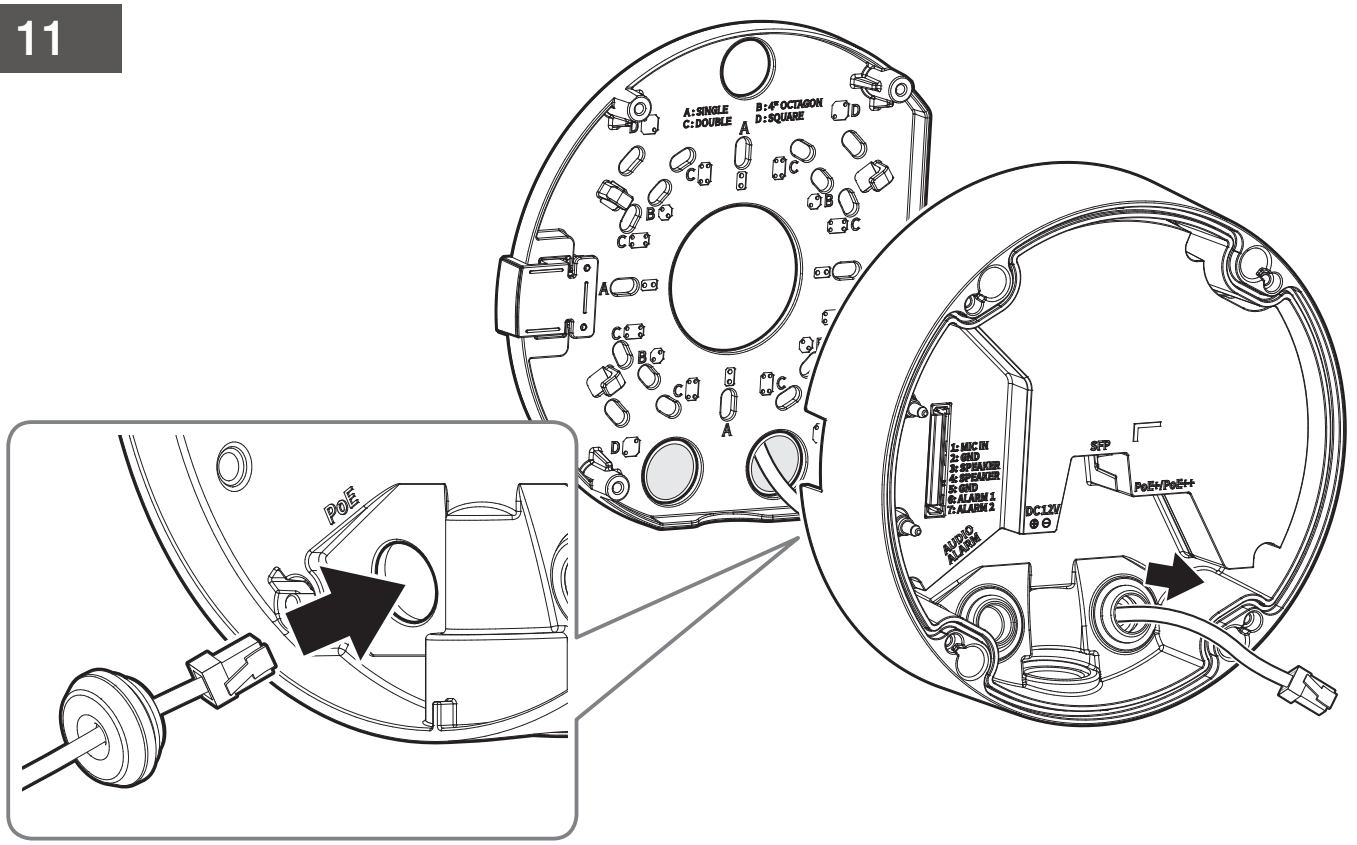
A: SINGLE
C: DOUBLE
B: 4" OCTAGON
D: SQUARE
PoE
1: MIC IN
2: GND
3: SPEAKER
4: SPEAKER
5: GND
6: ALARM 1
7: ALARM 2
AUDIO ALARM
DC12V
SFP
PoE+/PoE++

12

• 安装电源(DC 12V)/音频/警报电缆

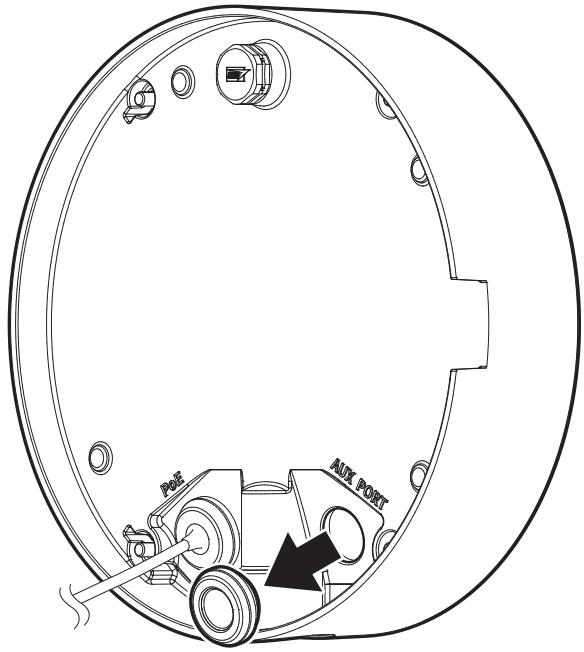

13

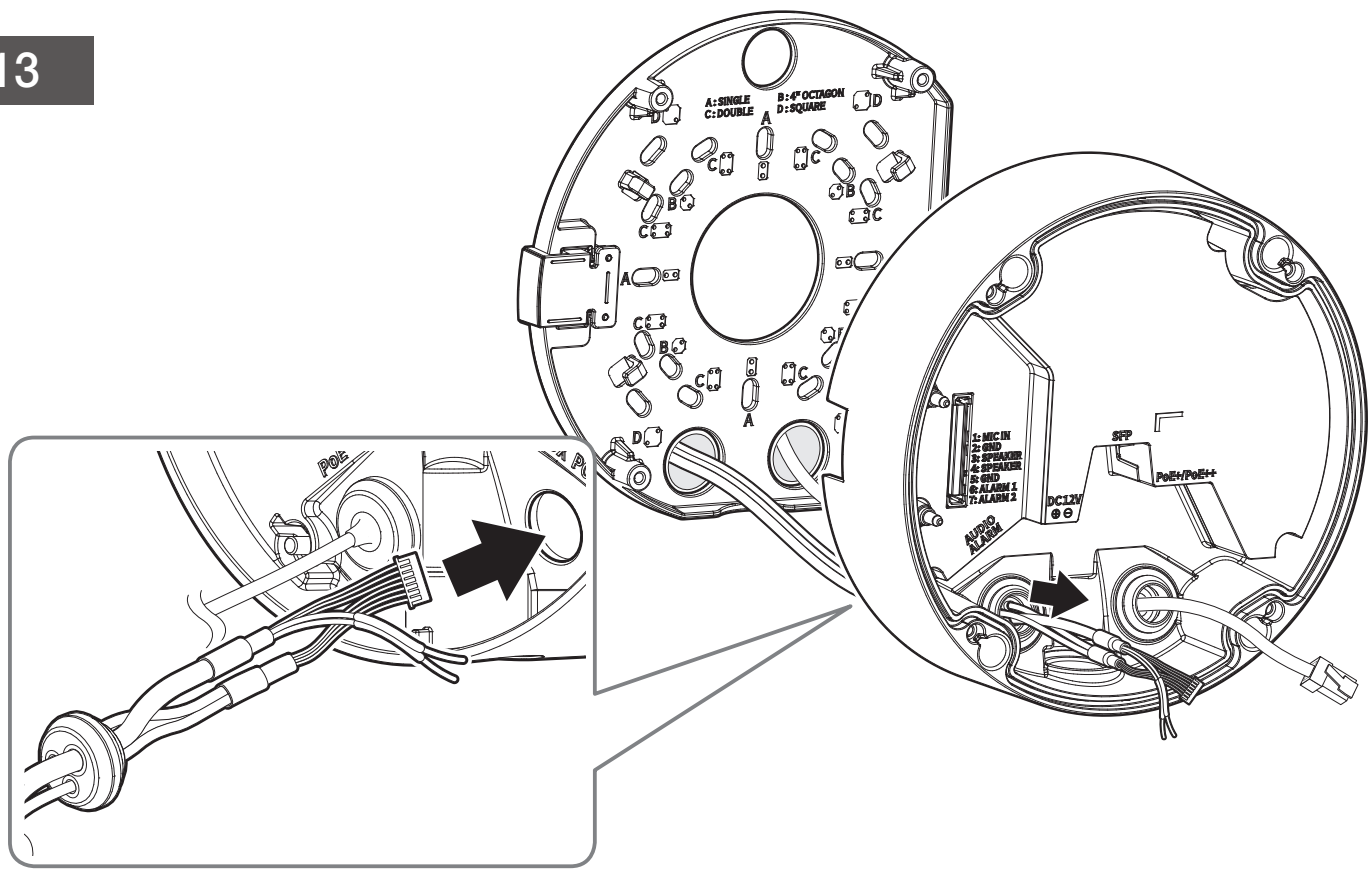

14 • 连接DC 12V电源线

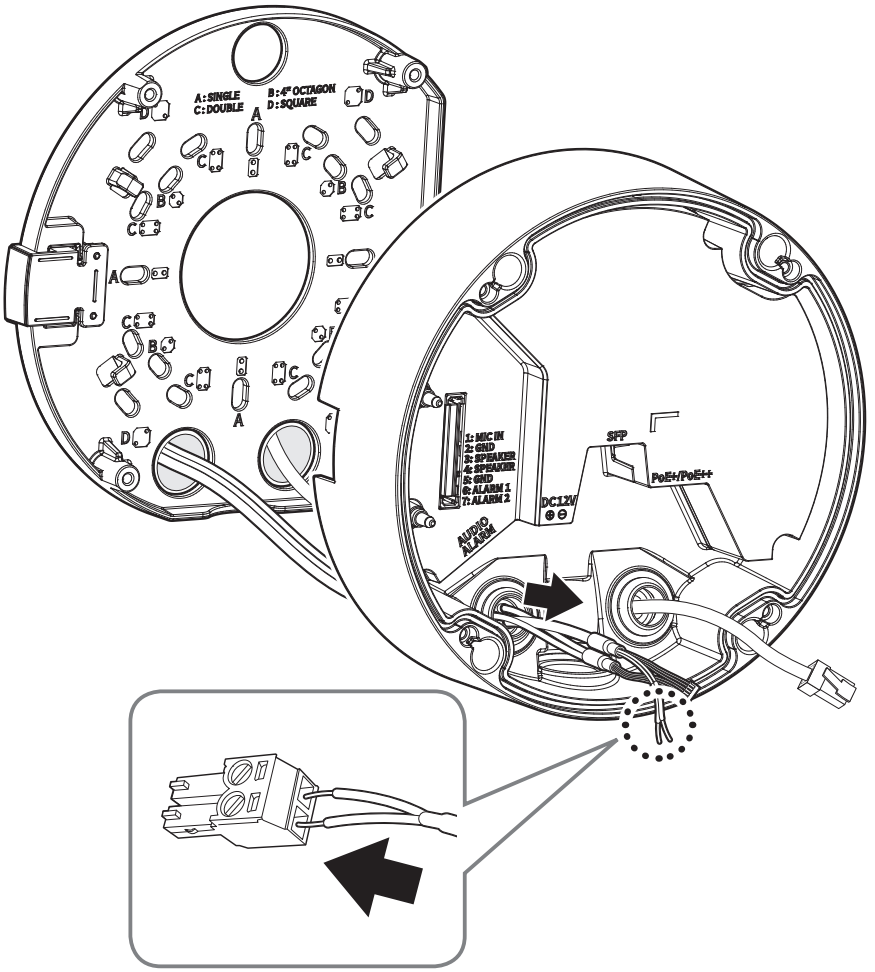

15

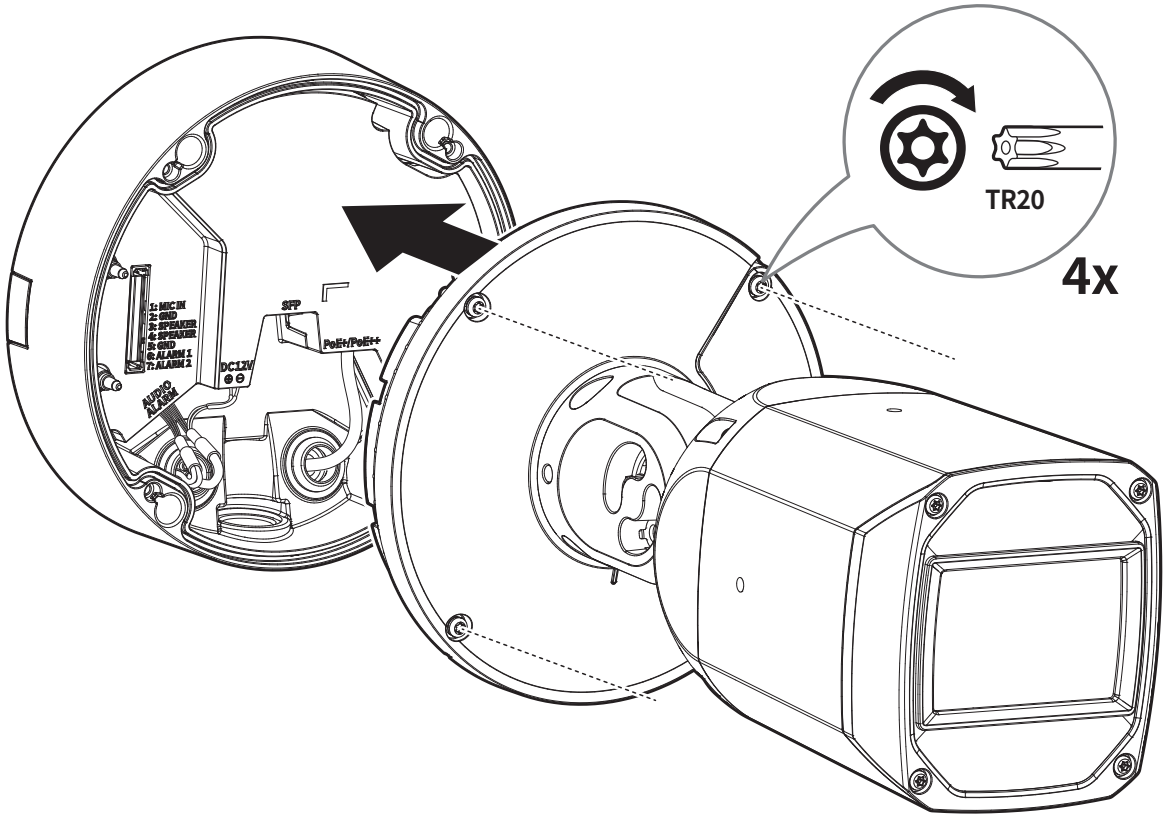
1: MIC IN
2: GND
3: SPEAKER
4: SPEAKER
5: GND
6: ALARM 1
7: ALARM 2
AUDIO ALARM
DC12V
SFP
PoE+/PoE++
TR20
4x

16

- 未包括 : WiFi 接收器、OTG 适配器

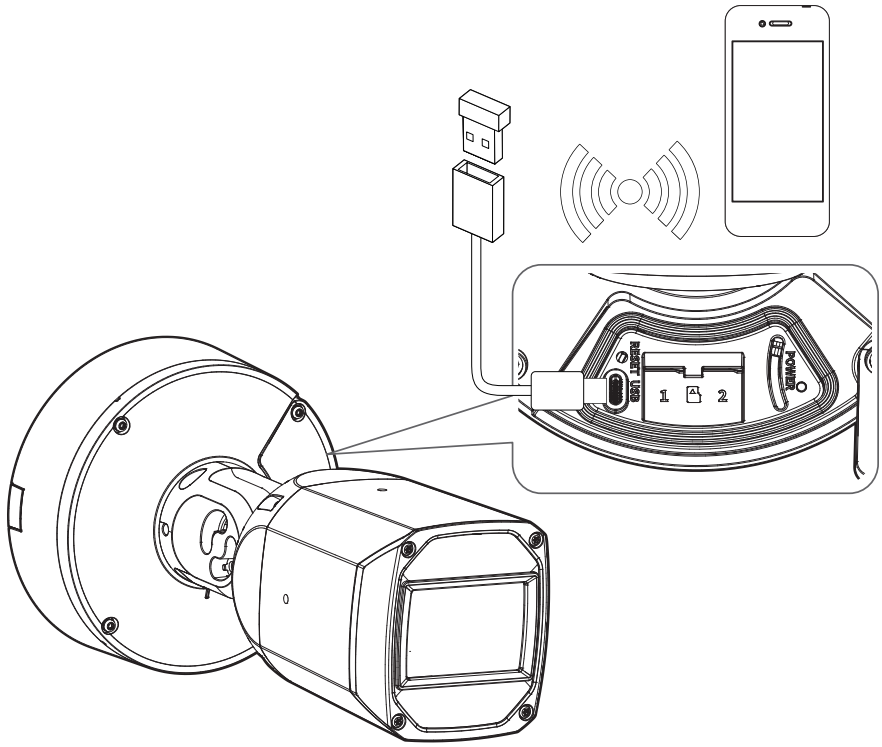

17

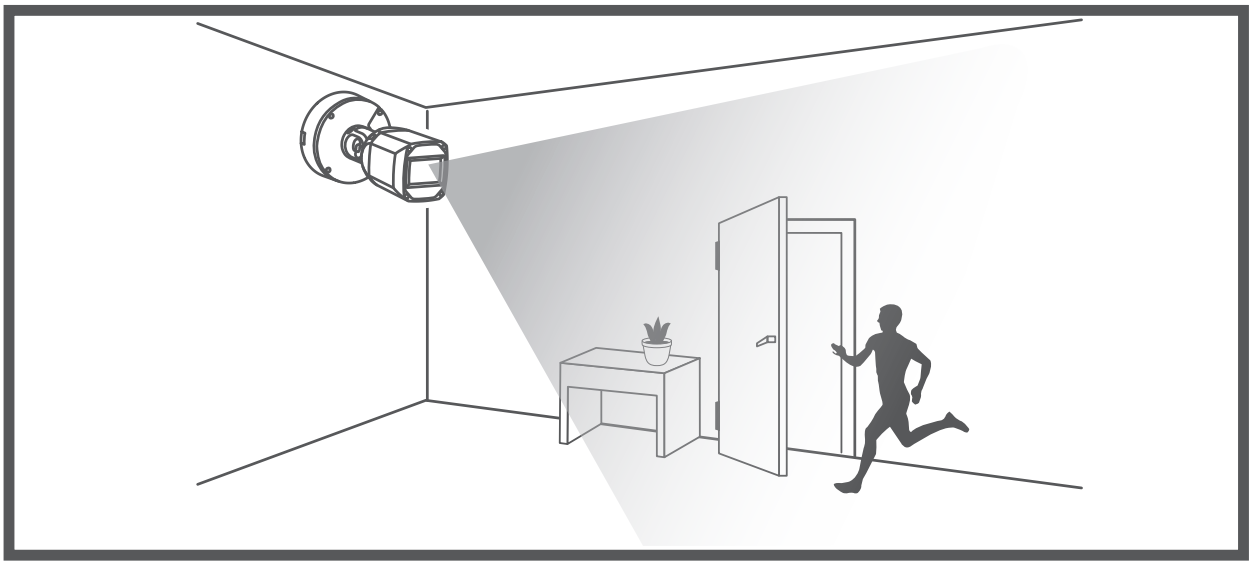

18-1

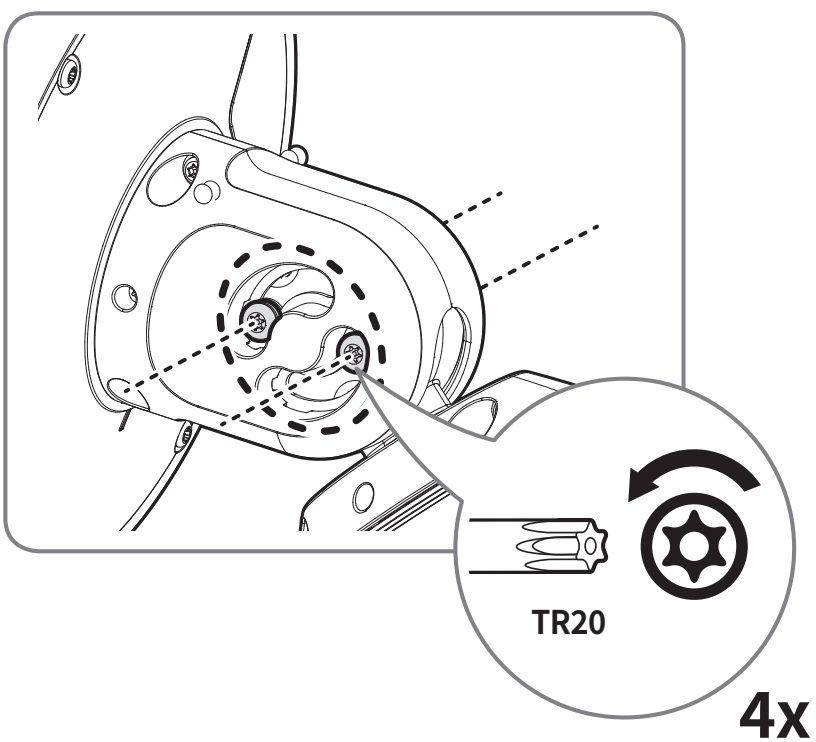

18-2

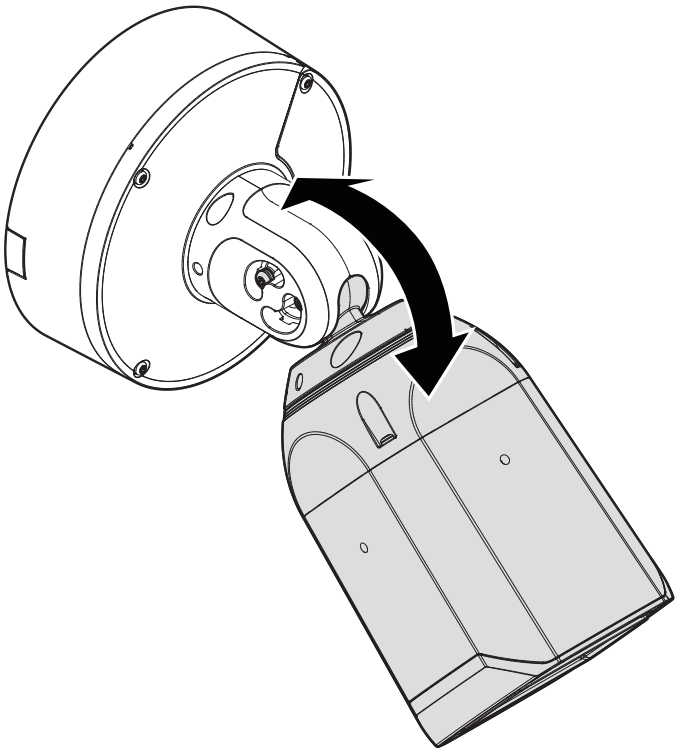

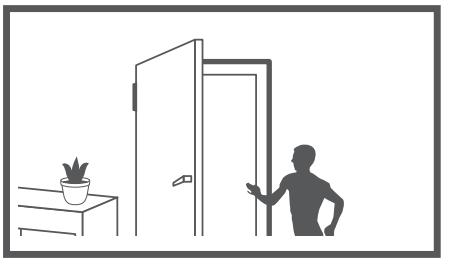

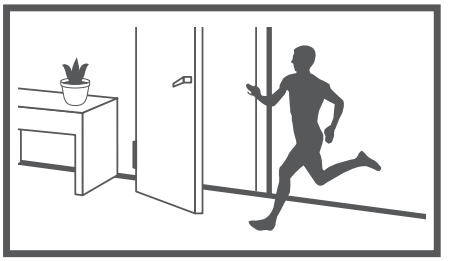

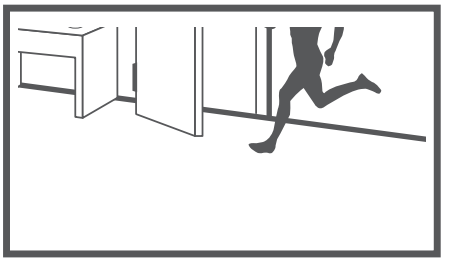

18-3

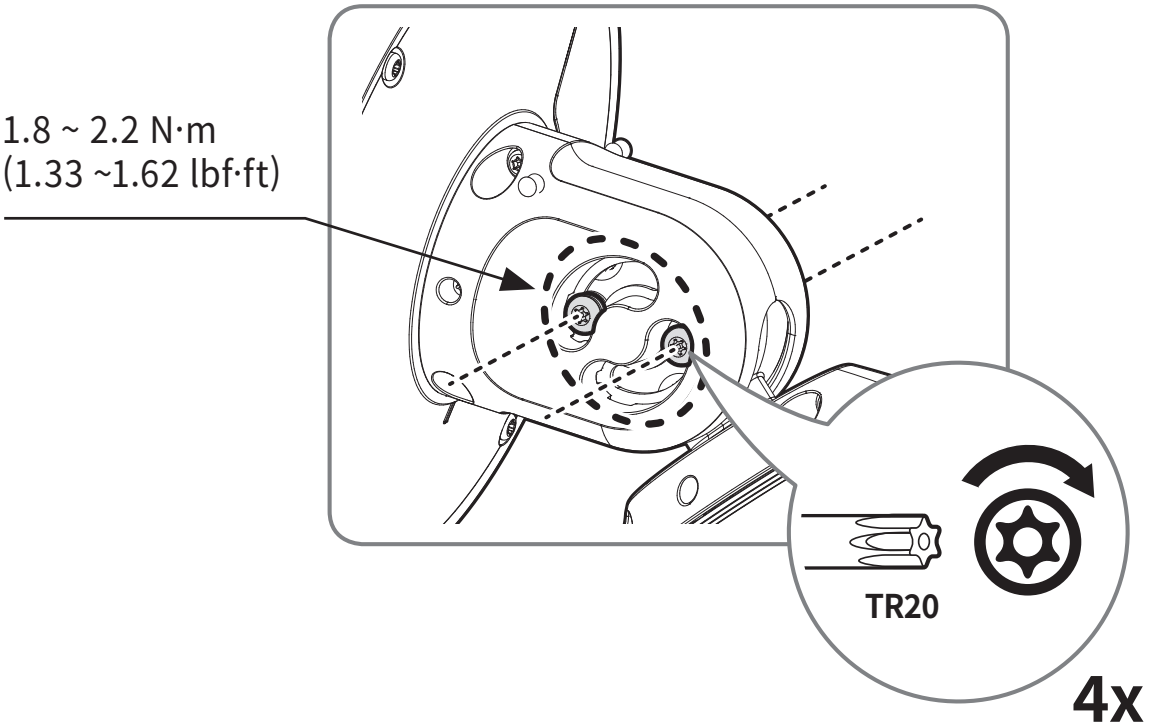

19-1

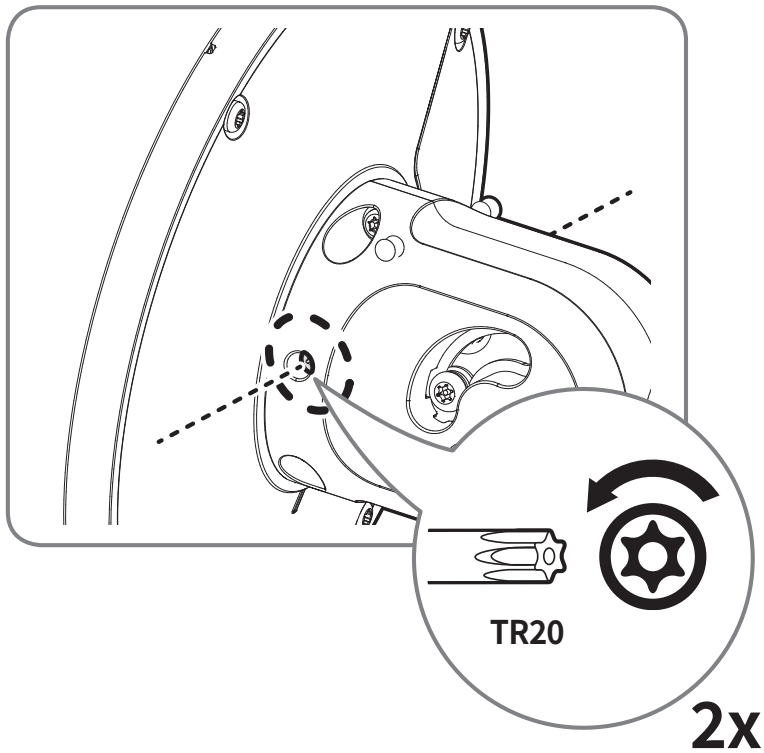

19-2

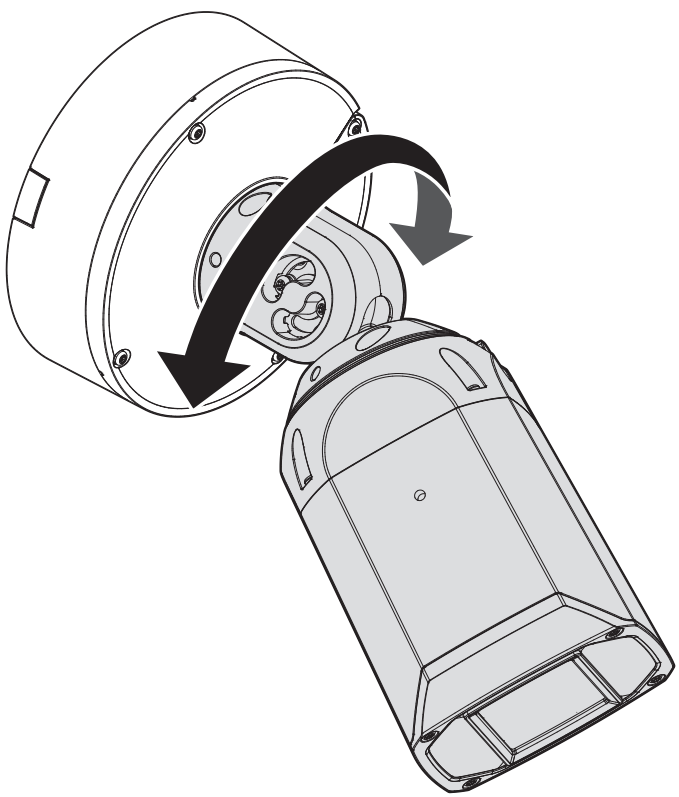

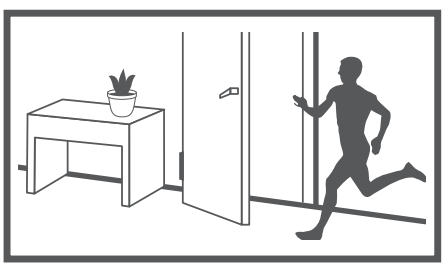

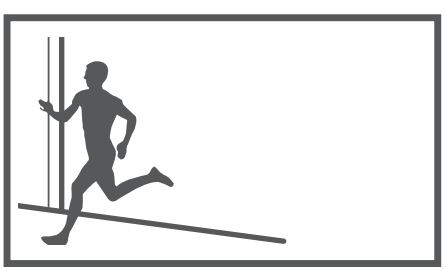

19-3

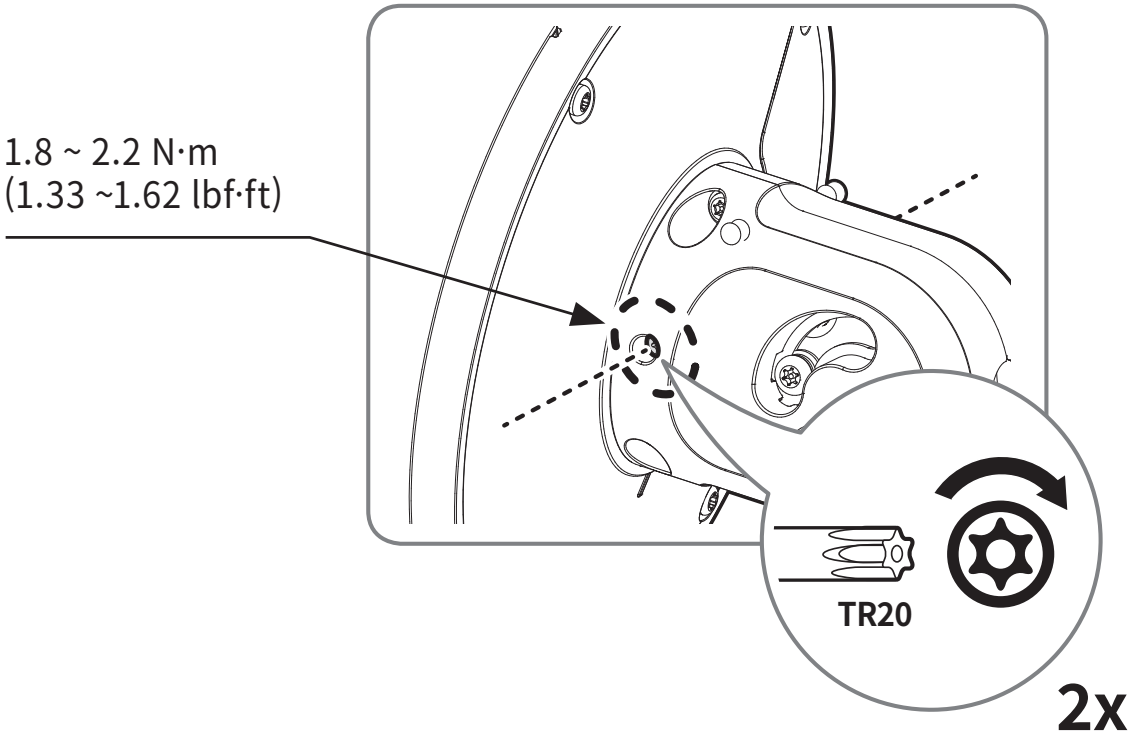

20-1

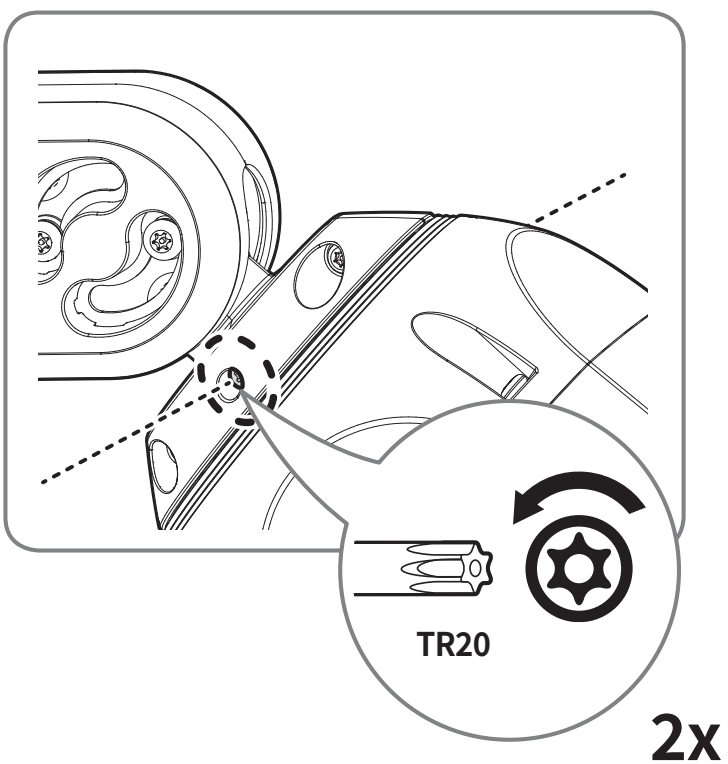

20-2

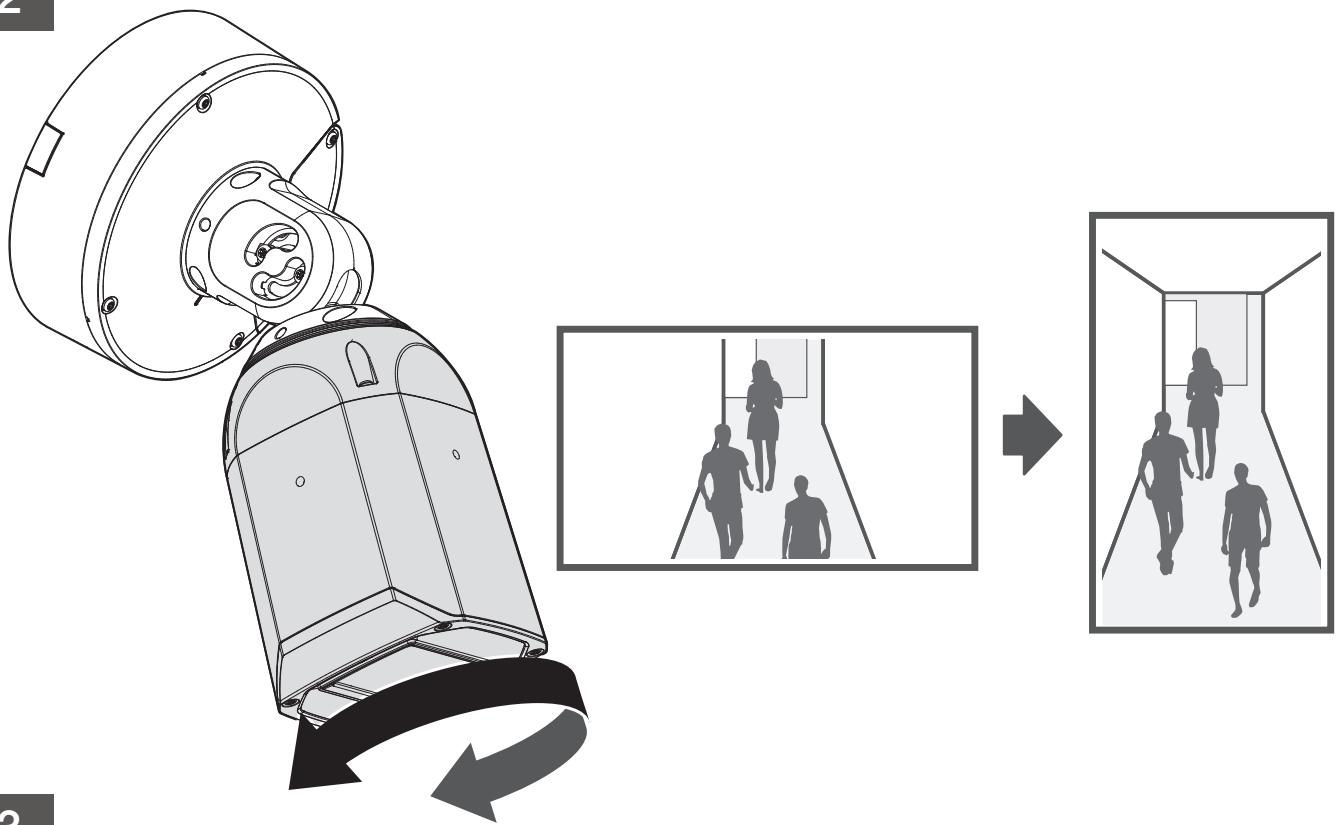

20-3

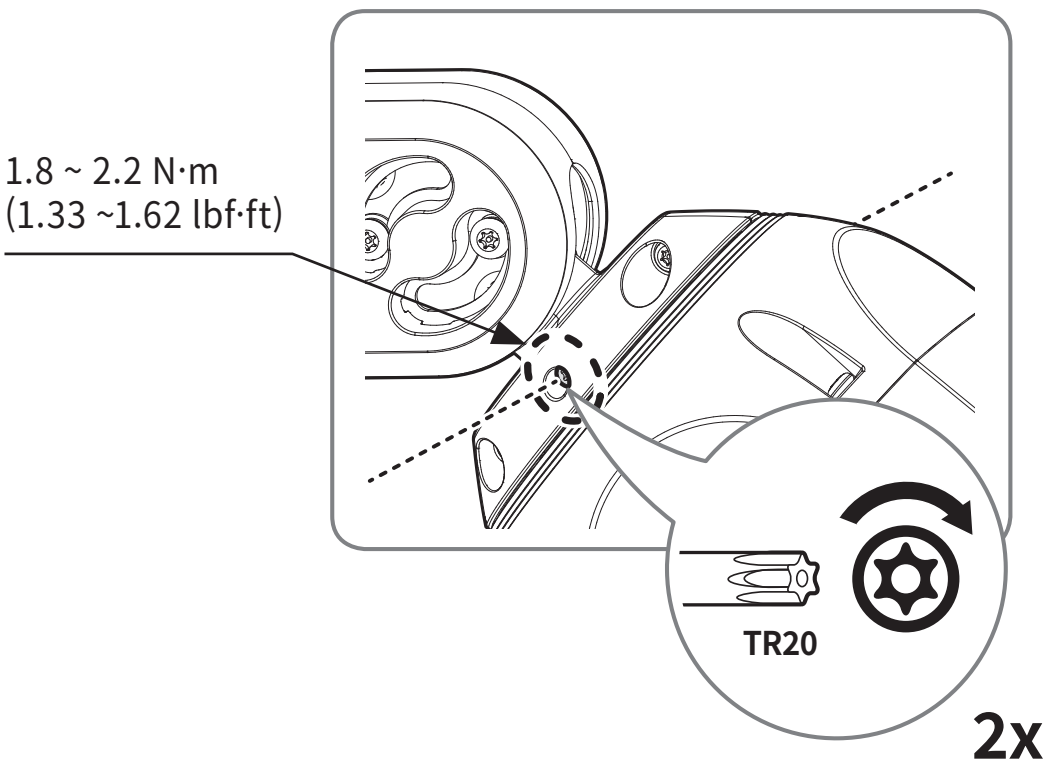

21

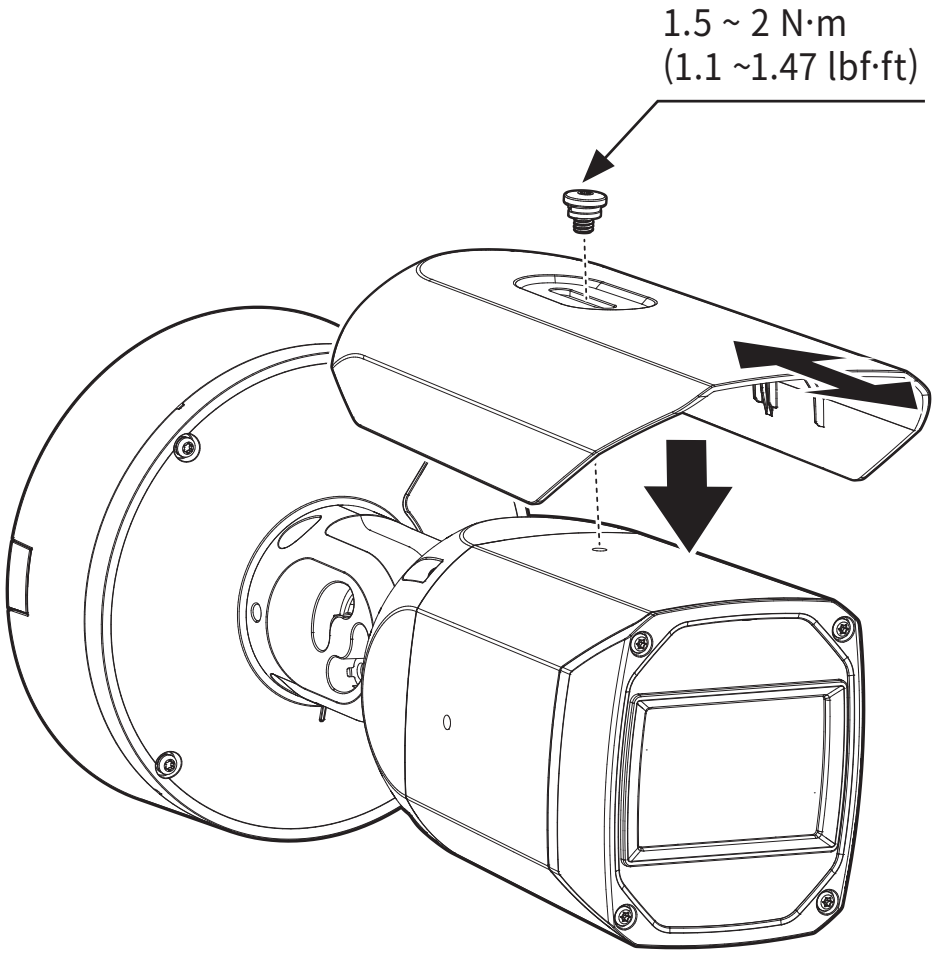

22

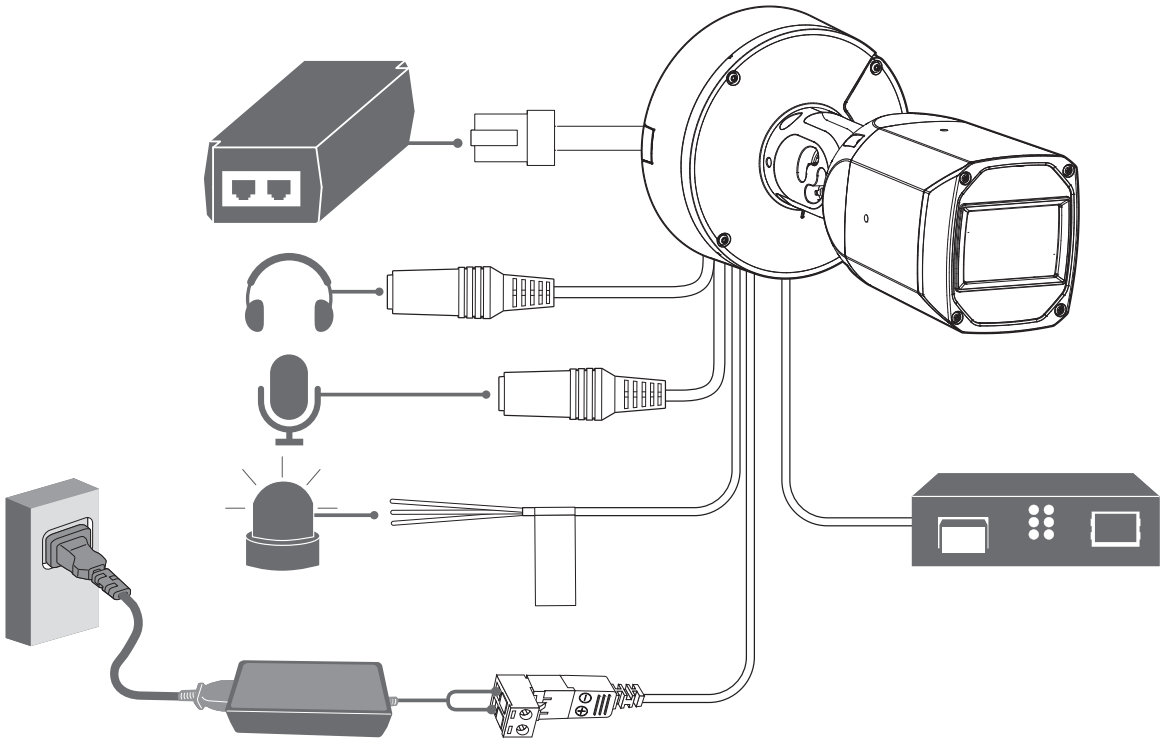

23

简体中文

密码设置

首次访问产品时，必须先注册登录密码。

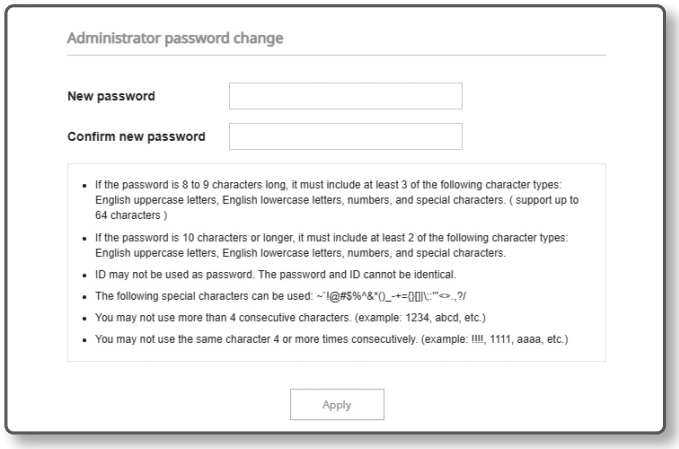

- 新密码必须至少需要8~9个字符，其中包含英语大小写、数字和特殊字符3种，如使用10个字符以上，至少需要使用2种以上。（最多64个字）
  - 允许使用的特殊字符为：~`!@#$%^&*( )_-+={ }[ ]|\;: ‘ “<>.,?/
- 密码不能包含空格。
- 不能使用与ID相同的密码。
- 为加强安全性，密码中不能使用重复的相同字符或连续的键盘排列。
- 如忘记密码，需要按下摄像机上的【**RESET**】按钮恢复出厂设置，请务必牢记密码。

登录

每当访问摄像机时，登录窗口都会出现。
输入用户 ID 和密码以访问摄像机。

1. 在 <**User Name**> 输入框中输入“**admin**”。
2. 在 <**Password**> 输入字段中输入密码。
3. 单击 [**Sign in**]。

正在连接至 WIFI

摄像机设置

1. 在USB C型端子上连接OTG转接头（C型）和WiFi无线网卡。

摄像机设置

1. 安装 Wisenet Installation 应用程序。
2. 打开 WiFi 后选择摄像机 SSID。
3. 运行 Wisenet Installation 应用程序。
4. 登入摄像机后即可连接视频。
5. 可通过智能手机观看视频的同时调整视角。

HEVC Advance™
Covered by patents at patentlist.accessadvance.com

microSD, microSDHC, and microSDXC Logos are trademarks of SD-3C LLC. microSD, microSDHC, microSDXC are trademarks or registered trademarks of SD-3C, LLC in the United States, other countries or both.

EAC

Подлежит использованию по назначению
в нормальных условиях
Срок службы : 7 лет.

Türkiye Distribütörü

EDS Elektronik Destek Sanayi ve Ticaret Ltd. Şti.
Meclis Mah. Teraziler Cad. Hayran Sk. (Eskisi Kılıç Sk.) No: 4 Sancaktepe / İstanbul / Türkiye
Tel +90.216.313.25.15

ENTES ELEKTRONİK CİHAZLAR İMALAT VE TİC. A.Ş.
Dudullu Org.San.Bölg. 1. Cad. No:23 34776 Ümraniye / İstanbul / Türkiye
Tel +90.216.313.01.10

TEKNOMAKS TEKNOLOJI / TEKNOMAKS BILISIM
MERDİVENKÖY MAH.DİKYOL SOK. BUSINESS ISTANBUL No:2, Kat:7, D:B67, 34732 Kadıköy / İstanbul / Türkiye
Tel +90.212.217.54.22

Cihazın Ticaret Bakanlığınca önerilen ortalama ömrü
Cihazın EEE yönetmeliklerine uygun olduğuna benzer beyan

Hanwha Vision