

Network Thermal

TNO-C3030TRA

QVGA Radiometric AI Thermal Camera

Key Features

- AI based object classification (person, vehicle)
- High performance detector applied (17µm, NETD 30mK)
- QVGA resolution (384x288) with wide angle
- Wide temperature monitoring range -40°~ 550°C (-40°F ~ 1,022°F)
- Smaller and light camera (Φ147 * 233.5mm, 1.7KG) for easy and simple installation
- Maximum 30fps @ all resolutions (H.265/H.264/MJPEG)

Design and specifications are subject to change without notice. The latest product information / specification can be found at HanwhaVision.com
Hanwha Vision is formerly known as Hanwha Techwin.

© Hanwha Vision CO., LTD. All rights reserved.

TNO-C3030TRA

QVGA Radiometric AI Thermal Camera



Specifications

Video

Imaging Device	Type	Uncooled micro bolometer (384x288)
Resolution		768x576, 384x288
Max. Framerate	H.265/H.264	30fps
	MJPEG	30fps
Spectral Range		8~14㎛
NETD		≤30mK
Pixel Size		17㎛
Video Out		USB: Micro USB Type B. Preview and installation ONLY. Requires WiFi dongle.

Lens

Focal Length (mm)		9.7
Max Aperture Ratio (F number)	Wide	1.0
Angular Field of View	Horizontal	38°
	Vertical	29°
	Diagonal	47°
iFoV		1.8mRad
Min. Object Distance		2.8m(9.19ft)
Focus Control		Fixed

Pan / Tilt / Rotate

Pan / Tilt / Rotate Range	Pan	0°~350°
	Tilt	0°~90°
	Rotate	0°~350°

Operational

Motion Detection	Quantity	8ea
	Shape	8point Polygonal zones

Design and specifications are subject to change without notice. The latest product information / specification can be found at HanwhaVision.com
Hanwha Vision is formerly known as Hanwha Techwin.

© Hanwha Vision CO., LTD. All rights reserved.

Operational

Privacy Masking	Quantity	6ea
	Shape	Rectangular zones
	Color / Option	Gray, Black, White
Video Rotation		Flip, Mirror, Hallway view(90°/270°)
Serial Interface		RS-485
Alarm Interface	In/Out	2 configurable I/O ports
Alarm Triggers		Analytics, Network disconnect, Alarm input, Time schedule, MQTT subscription
Alarm Events When Alarm Trigger Occurred		File upload(image): e-mail/FTP, Notification: e-mail, Recording: SD/SDHC/SDXC or NAS recording at event triggers,Alarm output, Handover: PTZ preset, MQTT: publication
Audio In		Selectable(mic in/line in)
Audio Out		Line out
Color Pallettes		Whitehot, Blackhot, Rainbow, Rainbow2, Sepia, Red, Iron, Custom

Analytics

Classified Object Type		Person, Vehicle
Thumbnail		BestShot
Analytics Events	Based on AI Engine	Object detection, Virtual line(Crossing/Direction), Virtual area(Loitering/Intrusion/Enter/Exit), Motion detection
	Normal	Motion detection, Tampering, Audio detection, Sound classification, Shock detection, Virtual area(Appear/Disappear), Tank level detection

Radiometry

Temperature Detect Range		-40°C~550°C
Temperature Accuracy		±2°C(≤150°C), ±15%(>150°C)
Temperature Detection ROI Zones	Quantity	10ea
	Shape / Option	Polygonal
Hybrid Pallettes		Support
Spot Temperature Reading		Support
ROI Condition Monitoring		Above, Below, Increase, Decrease

Network

Ethernet	Metal shielded RJ-45(10/100/1000BASE-T)
Video Compression	H.265: Main, H.264: Main/Baseline/High,MJPEG
Audio Compression	G.711 u-law /G.726 selectable,G.726(ADPCM) 8kHz,G.711 8kHz, G.726: 16kbps,24kbps,32kbps,40kbps, AAC-LC: 48kbps at 16kHz
Smart Codec	Manual, WiseStream II , WiseStream III
Bitrate Control	H.265/H.264: CBR or VBR, MJPEG: VBR

Design and specifications are subject to change without notice. The latest product information / specification can be found at HanwhaVision.com
Hanwha Vision is formerly known as Hanwha Techwin.

© Hanwha Vision CO., LTD. All rights reserved.

Network

Streaming	Unicast	Up to 20 users
	Multicast	Support
	Multiple Streaming	Up to 10 profiles
Protocol		IPv4, IPv6, TCP/IP, UDP/IP, RTP(UDP), RTP(TCP), RTCP, RTSP, NTP, HTTP, HTTPS, SSL/TLS, DHCP, FTP, SMTP, ICMP, IGMPv2, SNMPv1/v2c/v3(MIB-2), ARP, DNS, DDNS, QoS, UPnP, Bonjour, LLDP, CDP, SRTP(TCP, UDP Unicast), MQTT
Application Programming Interface	ONVIF	S, G, T, M
	Others	SUNAPI(HTTP API), Hanwha Vision Open Platform

Security

OS / Firmware Protect	Encrypted firmware, Secure boot, Signed firmware
User authentication	Digest authentication, Prevent brute-force attack
Network authentication	IEEE 802.1X(EAP-TLS, EAP-LEAP, EAP-PEAP, MSCHAPv2)
Secure Communication	HTTPS, WSS(WebSocket Secure), SRTP
Access Control	IP-based access control
Data Protect	Encryption credentials
Audit	Access / System / Event Log management
Device ID	Device certificate(Hanwha Vision Root CA)
Secure Storage	TPM(Trusted platform module), SDcard partition encrypt(AES-256)
Security Certificate	TPM 2.0 with FIPS 140-2 level2

General

Memory	RAM	2GB
	Flash	512MB
Edge Storage	Micro SD/SDHC/SDXC	Max. 1TB x 1slot

Environmental & Electrical

Operating Condition	Temperature	-40°C~+60°C(-40°F~+140°F)
	Humidity	0~95% RH(non-condensing)
Storage Condition	Temperature	-50°C~+60°C(-58°F~+140°F)
	Humidity	0~95% RH(non-condensing)
Input Voltage		PoE(IEEE802.3af, Class3), 12VDC
Power Consumption	PoE	Max. 10.8W, typical 9W
	12VDC	Max. 9.4W, typical 7.7W

Mechanical

Color	White
Material	Aluminum, PC(Polycarbonate)
RAL Code	RAL9003

Design and specifications are subject to change without notice. The latest product information / specification can be found at HanwhaVision.com
Hanwha Vision is formerly known as Hanwha Techwin.

© Hanwha Vision CO., LTD. All rights reserved.

Mechanical

Product Dimensions	ø93.8x233.5mm(ø3.69x9.19")
Product Weight	1700g(3.75lb)
Compatible Conduit Hole	Support conduit compatibility via optional adaptor
Compatible Gang Box	Single, Double, 4" Octagon, Square

Certifications & Standards

EMC	FCC 47 CFR 15 Subpart B Class A, CE/UKCA - EN55032 Class A, EN 50130-4, EN 61000-3-2, EN 61000-3-3, VCCI CISPR 32 Class A, RCM AS-NZS CISPR 32 Class A, KS C 9832 Class A, KS C 9835, IC Regulation ICES-003 Issue 7 Class A
Safety	UL 62368-1, CAN/CSA C22.2 NO. 62368-1
Environment	IEC/EN 63000, IEC 60529 IP66, IEC 60529 IP67, IEC 62262 IK10, NEMA 250 type 4X

DRI (Johnson's Criteria)

Detection	Person(1.67PPM)	336m(1,101ft)
	Vehicle(0.65PPM)	857m(2,813ft)
Recognition	Person(6.67PPM)	84m(275ft)
	Vehicle(2.61PPM)	214m(703ft)
Identification	Person(13.33PPM)	42m(138ft)
	Vehicle(5.22PPM)	107m(352ft)

Design and specifications are subject to change without notice. The latest product information / specification can be found at HanwhaVision.com
Hanwha Vision is formerly known as Hanwha Techwin.

© Hanwha Vision CO., LTD. All rights reserved.

TNO-C3030TRA

QVGA Radiometric AI Thermal Camera



CAD

Unit: mm [inch]

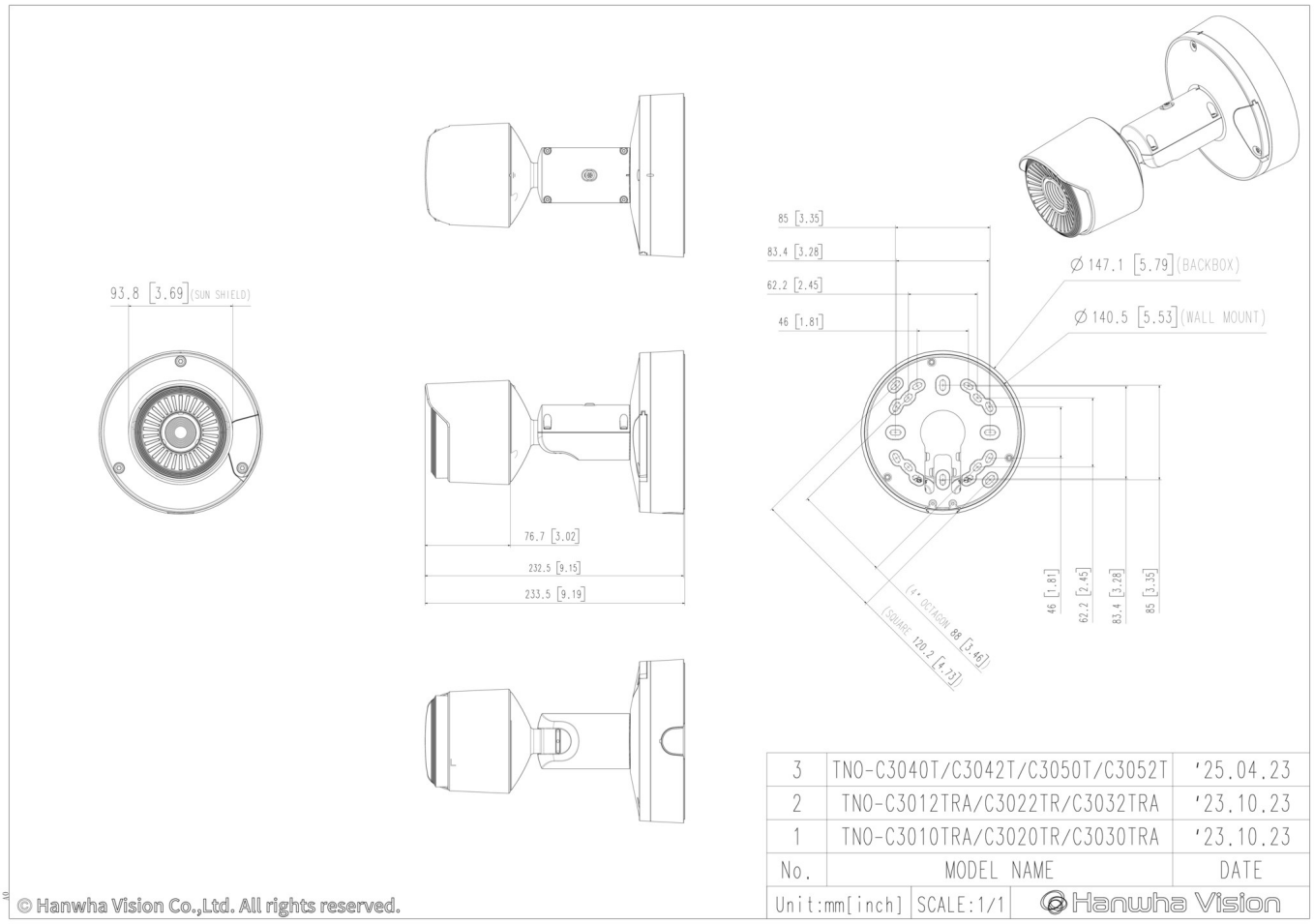

Design and specifications are subject to change without notice. The latest product information / specification can be found at HanwhaVision.com
Hanwha Vision is formerly known as Hanwha Techwin.

© Hanwha Vision CO., LTD. All rights reserved.