

Network Thermal

TNO-C3040T

QVGA AI Tele lens Thermal Camera

Key Features

- High performance thermal sensitivity (NETD 20mK@25°C)
- AI based object classification
- NEMA4X, NEMA-TS2, MIL-STD-810H
- Secure element with FIPS 140-3 level3, CC EAL6+

Design and specifications are subject to change without notice. The latest product information / specification can be found at HanwhaVision.com
Hanwha Vision is formerly known as Hanwha Techwin.

© Hanwha Vision CO., LTD. All rights reserved.

TNO-C3040T

QVGA AI Tele lens Thermal Camera



Specifications

Video

Imaging Device	Type	Uncooled micro bolometer (384x288)
Resolution		768x576, 384x288
Max. Framerate	H.265/H.264	30fps
	MJPEG	30fps
Spectral Range		8~14㎛
NETD		≤20mK@25°C, F1.0
Pixel Size		17㎛
Video Out		USB: Micro USB Type B. Preview and installation ONLY. Requires WiFi dongle.

Lens

Focal Length (mm)		13
Max Aperture Ratio (F number)	Wide	1.0
Angular Field of View	Horizontal	28.5°
	Vertical	21.4°
	Diagonal	35.5°
iFoV		1.308 mRad
Min. Object Distance		5m(16.4ft)
Focus Control		Fixed
Lens Type		Athermalized

Pan / Tilt / Rotate

Pan / Tilt / Rotate Range	Pan	0°~350°
	Tilt	0°~90°
	Rotate	0°~350°

Operational

Motion Detection	Quantity	8ea
	Shape	8point Polygonal zones

Design and specifications are subject to change without notice. The latest product information / specification can be found at HanwhaVision.com
Hanwha Vision is formerly known as Hanwha Techwin.

© Hanwha Vision CO., LTD. All rights reserved.

Operational

Privacy Masking	Quantity	6ea
	Shape	Rectangular zones
	Color / Option	Gray, Black, White
Video Rotation		Flip, Mirror, Hallway view(90°/270°)
Serial Interface		RS-485
Alarm Interface	In/Out	2 configurable I/O ports
	Others	Support extra alarm I/O via optional I/O box
Alarm Triggers		Analytics, Network disconnect, Alarm input, Time schedule, MQTT subscription
Alarm Events When Alarm Trigger Occurred		File upload(image): e-mail/FTP/SFTP, File upload(video clip): FTP/SFTP, Notification: e-mail, Recording: SD/SDHC/SDXC or NAS recording at event triggers,Alarm output, Handover: PTZ preset, MQTT: publication
Audio In		Selectable(mic in/line in)
Audio Out		Line out
Color Pallettes		Whitehot, Blackhot, Rainbow, Rainbow2, Sepia, Red, Iron, Custom

Analytics

Classified Object Type		Person, Vehicle
Thumbnail		BestShot
Analytics Events	Based on AI Engine	Object detection, Virtual line(Crossing/Direction), Virtual area(Loitering/Intrusion/Enter/Exit), Motion detection
	Normal	Motion detection, Tampering, Audio detection, Sound classification, Shock detection, Virtual area(Appear/Disappear)

Radiometry

Hybrid Pallettes	Support
ROI Condition Monitoring	None, Increase, Decrease

Network

Ethernet		Metal shielded RJ-45(10/100/1000BASE-T)
Video Compression		H.265: Main, H.264: Main/Baseline/High,MJPEG
Audio Compression		G.711 u-law /G.726 selectable,G.726(ADPCM) 8kHz,G.711 8kHz, G.726: 16kbps,24kbps,32kbps,40kbps, AAC-LC: 48kbps at 16kHz
Smart Codec		Manual, WiseStream II , WiseStream III
Bitrate Control		H.265/H.264: CBR or VBR, MJPEG: VBR
Streaming	Unicast	Up to 20 users
	Multicast	Support
	Multiple Streaming	Up to 10 profiles

Design and specifications are subject to change without notice. The latest product information / specification can be found at HanwhaVision.com
Hanwha Vision is formerly known as Hanwha Techwin.

© Hanwha Vision CO., LTD. All rights reserved.

Network

Protocol		IPv4, IPv6, TCP/IP, UDP/IP, RTP(UDP), RTP(TCP), RTCP, RTSP, NTP, HTTP, HTTPS, SSL/TLS, DHCP, FTP, SFTP, SMTP, ICMP, IGMPv2, SNMPv1/v2c/v3(MIB-2), ARP, DNS, DDNS, QoS, UPnP, Bonjour, LLDP, CDP, SRTP(TCP, UDP Unicast), MQTT, Syslog
Application Programming Interface	ONVIF	S, G, T, M
	Others	SUNAPI(HTTP API), Hanwha Vision Open Platform

Security

OS / Firmware Protect	Encrypted firmware, Secure boot, Signed firmware
User authentication	Digest authentication, Prevent brute-force attack
Network authentication	IEEE 802.1X(EAP-TLS, EAP-LEAP, EAP-PEAP, MSCHAPv2)
Secure Communication	HTTPS, WSS(WebSocket Secure), SRTP
Access Control	IP-based access control
Data Protect	Encryption credentials, Encrypt compress for live recording file export
Audit	Access / System / Event Log management
Device ID	Device certificate(Hanwha Vision Root CA)
Secure Storage	SDcard partition encrypt(AES-256), Secure element
Security Certificate	Secure element(FIPS 140-3 level3, CC EAL6+)

General

Memory	RAM	2GB
	Flash	512MB
Edge Storage	Micro SD/SDHC/SDXC	Max. 1TB x 1slot

Environmental & Electrical

Operating Condition	Temperature	-40°C~+60°C(-40°F~+140°F)
	Humidity	0~95% RH(non-condensing)
Storage Condition	Temperature	-50°C~+60°C(-58°F~+140°F)
	Humidity	0~95% RH(non-condensing)
Input Voltage		PoE(IEEE802.3af, Class3), 12VDC
Power Consumption	PoE	Max. 10.8W, typical 9W
	12VDC	Max. 9.4W, typical 7.7W

Mechanical

Color	White
Material	Aluminum
RAL Code	RAL9003
Product Dimensions	ø93.8x233.5mm(ø3.69x9.19")
Product Weight	1730g(3.81lb)
Compatible Conduit Hole	Support conduit compatibility via optional adaptor

Design and specifications are subject to change without notice. The latest product information / specification can be found at HanwhaVision.com
Hanwha Vision is formerly known as Hanwha Techwin.

© Hanwha Vision CO., LTD. All rights reserved.

Mechanical

Compatible Gang Box	Single, Double, 4" Octagon, Square

Certifications & Standards

EMC	FCC 47 CFR 15 Subpart B Class A, CE/UKCA - EN55032 Class A, EN 50130-4, EN 61000-3-2, EN 61000-3-3, VCCI CISPR 32 Class A, RCM AS-NZS CISPR 32 Class A, KS C 9832 Class A, KS C 9835, IC Regulation ICES-003 Issue 7 Class A
Safety	UL 62368-1, CAN/CSA C22.2 NO. 62368-1
Environment	IEC/EN 63000, IEC 60529 IP66, IEC 60529 IP67, IEC 62262 IK10, NEMA TS 2-2013 (2.2.7, 2.2.8, 2.2.9), NEMA 250 type 4X, IEC 60068-2-1, IEC 60068-2-2, IEC 60068-2-6, IEC 60068-2-14, IEC 60068-2-27, IEC 60068-2-78, MIL-STD-810H 501.7, MIL-STD-810H 502.7, MIL-STD-810H 507.6, MIL-STD-810H 509.7, MIL-STD-810H 514.8, MIL-STD-810H 516.8

AI Detection Distance

Person(1.8m/5.9ft)	Wide	up to 87m(284ft)
Vehicle(1.45m/4.8ft)	Wide	up to 115m(378ft)

DRI (Johnson's Criteria)

Detection	Person(1.67PPM)	454m(1,488ft)
	Vehicle(0.65PPM)	1,159m(3,803ft)
Recognition	Person(6.67PPM)	113m(372ft)
	Vehicle(2.61PPM)	290m(951ft)
Identification	Person(13.33PPM)	57m(186ft)
	Vehicle(5.22PPM)	145m(475ft)

Design and specifications are subject to change without notice. The latest product information / specification can be found at HanwhaVision.com
Hanwha Vision is formerly known as Hanwha Techwin.

© Hanwha Vision CO., LTD. All rights reserved.

TNO-C3040T

QVGA AI Tele lens Thermal Camera



CAD

Unit: mm [inch]

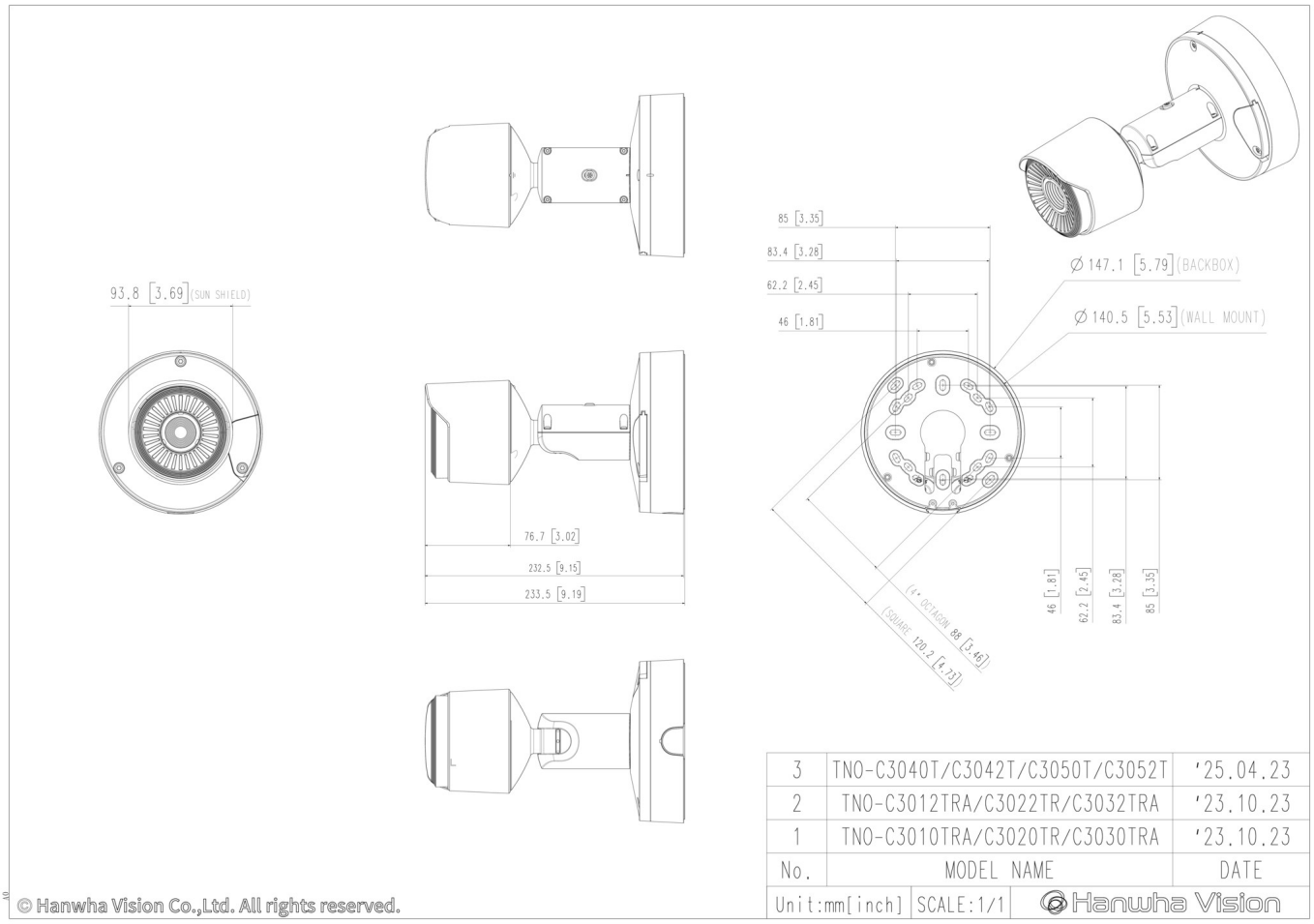

No.	MODEL NAME	DATE
3	TNO-C3040T/C3042T/C3050T/C3052T	'25.04.23
2	TNO-C3012TRA/C3022TR/C3032TRA	'23.10.23
1	TNO-C3010TRA/C3020TR/C3030TRA	'23.10.23

Unit:mm[inch] | SCALE:1/1 | Hanwha Vision

Design and specifications are subject to change without notice. The latest product information / specification can be found at HanwhaVision.com
Hanwha Vision is formerly known as Hanwha Techwin.

© Hanwha Vision CO., LTD. All rights reserved.

Compatible Devices



SBP-160HMW1



SBP-140CMB



SBP-180CMB



SBP-180CMS

SBP-150CMP

SBP-300CMP

SBP-900CMP

SBP-C15H



SBP-C15NP



SBP-C35H



SBP-C15P



SBP-150CMI



SBP-300CMI



SBP-300CMW1



SBP-900CMW

SBP-300CMTW



SBP-300CMTS



SBP-250WMW



SBP-400WMW



SBP-115PFA



SBP-150PMW



SBD-180PMW



SBP-156KMW



SBP-156LMW1



SBP-050NBW



SBP-150NBW



SBP-060BA



SBP-300WMW



SBP-300WMW1



SBP-160WMW1



SBP-300BW1



SBP-300PMW2

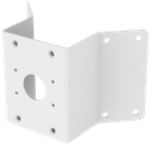

SBP-300KMW1



SBP-300LMW



SBP-300NBW

Design and specifications are subject to change without notice. The latest product information / specification can be found at HanwhaVision.com
Hanwha Vision is formerly known as Hanwha Techwin.

© Hanwha Vision CO., LTD. All rights reserved.