Thank you for giving UL the opportunity to partner with you.
Please note, Follow-Up Procedure Revisions or Report Revisions do not include Authorization Pages, Indices, Section General, and/or Appendices unless revisions were required or requested.

Should you have any questions, after reviewing the material, or need to report any inaccuracies, please reach out to your UL representative or find UL contact details for your local Customer Service Department at https://www.ul.com/about/locations.

Please find attached the related material on Project

For your convenience, the below describes the related updates:

E158873-A6251-DescriptionUL
Figure-18-Total

This material is provided on behalf of UL LLC (UL) or any authorized licensee of UL.

Times change, Trust Remains™

UL TEST REPORT AND PROCEDURE

Standard:	UL 62368-1, 3rd Ed, 2021-10-22 (Audio/video, information and communication technology equipment Part 1: Safety requirements) CAN/CSA C22.2 No. 62368-1:19, 3rd Ed, 2021-10-22 (Audio/video, information and communication technology equipment Part 1: Safety requirements)
Certification Type:	Listing
CCN:	AZOT, AZOT7 (Audio/video, Information and Communication Technology Equipment)
Complementary CCN:	N/A
Product:	BARCODE READER
Model:	TNS-7000M
Rating:	24 Vdc, 0.31 A
Applicant Name and Address:	HANWHA VISION CO LTD 6, PANGYO-RO 319BEON-GIL, BUNDANG-GU SEONGNAM-SI GYEONGGI-DO 13488 KOREA

This is to certify that representative samples of the products covered by this Test Report have been investigated in accordance with the above referenced Standards. The products have been found to comply with the requirements covering the category and the products are judged to be eligible for Follow-Up Service under the indicated Test Procedure. The manufacturer is authorized to use the UL Mark on such products which comply with this Test Report and any other applicable requirements of UL LLC ('UL') in accordance with the Follow-Up Service Agreement. Only those products which properly bear the UL Mark are considered as being covered by UL's Follow-Up Service under the indicated Test Procedure.

The applicant is authorized to reproduce the referenced Test Report provided it is reproduced in its entirety.

UL authorizes the applicant to reproduce the latest pages of the referenced Test Report consisting of the first page of the Specific Technical Criteria through to the end of the Conditions of Acceptability.

Any information and documentation involving UL Mark services are provided on behalf of UL LLC (UL) or any authorized licensee of UL.

Prepared By: Sohyun Lee / Project Handler Reviewed By: Seungtae Kim / Reviewer

Copyright © 2019

Supporting Documentation

The following documents located at the beginning of this Procedure supplement the requirements of this Test Report:

A. Authorization - The Authorization page may include additional Factory Identification Code markings.

B. Generic Inspection Instructions -

i. Part AC details important information which may be applicable to products covered by this Procedure. Products described in this Test Report must comply with any applicable items listed unless otherwise stated in the body of this Test Report.

ii. Part AE details any requirements which may be applicable to all products covered by this Procedure. Products described in this Test Report must comply with any applicable items listed unless otherwise stated in the body of each Test Report.

iii. Part AF details the requirements for the UL Certification Mark which is not controlled by the technical standard used to investigate these products. Products are permitted to bear only the Certification Mark(s) corresponding to the countries for which it is certified, as indicated in each Test Report.

Product Description

BARCODE READER consists of LED body and Camera body parts. That parts are connected by FPWB.

Model Differences

N/A

Test Item Particulars

Product group	end product
Classification of use by	Instructed person
Supply Connection	not mains connected: ES1
Supply tolerance	None
Supply connection – type	Not directly connected to the mains
Considered current rating of protective device	N/A
Equipment mobility	wall/ceiling-mounted
Over voltage category (OVC)	OVC I
Class of equipment	Class III
Special installation location	N/A
Pollution degree (PD)	PD 2
Manufacturer’s specified Tma (°C)	55
IP protection class	IPX0
Power systems	not AC mains
Altitude during operation (m)	2000 m or less
Altitude of test laboratory (m)	2000 m or less
Mass of equipment (kg)	0.72

Technical Considerations

- The product was submitted and evaluated for use at the maximum ambient temperature (Tma) permitted by the manufacturer’s specification of : 55 °C
- The product is intended for use on the following power systems : No direct connection
- Considered current rating of protective device as part of the building installation (A) : N/A
- Mains supply tolerance (%) or absolute mains supply : No direct connection

- The Risk Group of a lamp or lamp system (including LEDs) is : Exempt (For LED module, model: SPI-BWN0)
- The following are available from the Applicant upon request : Installation (Safety) Instructions / Manual
- The product was investigated to the following additional standard : IEC 62471:2006

Additional Information

4791764728
- Maximum Normal Load: Continuous operating with LED on (Sutter speed 900 us).

Additional Standards

The product fulfills the requirements of: N/A

Markings and Instructions

Clause Title	Marking or Instruction Details
Equipment identification marking – Manufacturer identification	Listee’s Company’s name, Trade Name, File Number
Equipment identification marking – model identification	Model Number
Equipment rating marking – ratings	Input Ratings (voltage, current)
Hard Copy	A. IMPORTANT or ATTENTION or similar wording B. Please check 'Manuals' from out website, before connecting to the supply. C. Company website URL (https://www.~~) or QR code.
(Website) Manual - 1	This product is intended to be supplied by a UL Listed Power Supply Unit marked “Class 2” or “LPS” or “PS2” and rated from 24 Vdc, 0.31 A.
SCC requirement	If the signal words DANGER, WARNING, and CAUTION are included, a French manual is provided.

Special Instructions to UL Representative

N/A

BD1.0	TABLE: Production-Line Testing Requirements					
BD1.1	**Electric Strength Test Special Constructions – Refer to Generic Inspection Instructions, Part AC for further information.**					
Model	Component	Removable parts	Test probe location	Test V rms	Test V dc	Test Time, s
N/A	N/A	N/A	N/A	N/A	N/A	N/A
BD1.2	**Earthing Continuity Test Exemptions – This test is not required for the following models:**					
	All models					
BD1.3	**Electric Strength Test Exemptions – This test is not required for the following models:**					
	All models					
BD1.4	**Electric Strength Test Component Exemptions – The following solid-state components may be disconnected from the remainder of the circuitry during the performance of this test.**					
	All models					

BE1.0	Sample and Test Specifics for Follow-Up Tests at UL				
Model	Component	Material	Test	Sample (s)	Test Specifics
N/A	N/A	N/A	N/A	N/A	N/A

4.1.2	TABLE: List of critical components					Pass
Object / part No.	Manufacturer/ trademark	Type / model	Technical data	Product Category CCN(s)	Mark(s) of conformity	Supplement ID
Enclosure - Side (Metal)	Interchangeable	Interchangeable	Aluminum, Min. 2.0 mm thickness, See enclosure for dimension.	-	-	
Enclosure - Bottom (Metal)	Interchangeable	Interchangeable	Aluminum, Min. 2.0 mm thickness, See enclosure for dimension.	-	-	
Internal Metal Part Materials	Interchangeable	Interchangeable	Aluminum, Min. 2.0 mm thickness, See enclosure for dimension.	-	-	
Mounting bracket (Metal)	Interchangeable	Interchangeable	Stainless Steel, Min. 2.0 mm thickness.	-	-	
Fuse (F1)	LITTELFUSE INC	449*	125 V, 2.0 A	JDYX2	UL (E10480)	
Opto-coupler (LS1, LS2, LS3)	LITE-ON Technology Corporation	LTV-356T(%)(C) (LTV-356T-BN)	Isolation Voltage: 3750, Max. Operation Temperature: 110 deg. C	FPQU2	UL (E113898)	
Opto-coupler (PC1, PC2, PC3)	LITE-ON Technology Corporation	LTV-354T(%)(C) (LTV-354T-TP-B2-G)	Isolation Voltage: 3750, Max. Operation Temperature: 110 deg. C	FPQU2	UL (E113898)	
Rechargeable battery (BAT1)	SEIKO INSTRUMENTS INC MICRO-ENERGY DIV	ML414H	Lithium, Rechargeable, Max Charging Voltage: 3.4 Vdc, Max Charging current: 300 mA	BBCV2	UL (MH15628)	
Lithium Battery Protection Circuit (BAT1)	Interchangeable	Interchangeable	Diode (D1, 80 V, 250 mA) and Resistor (R84, 3.3 Kohm) in series	-	-	

Thermal pad	KOMOTECH	KGP-1(a)	Min. 2.0 mm thickness, rated V-0, 150 deg. C	QMFZ2	UL (E245303)	
FPWB	SI FLEX CO LTD	T4	Min. V-0, 260 deg. C	ZPXK2	UL (E218849)	
FPWB - Alternate	Interchangeable	Interchangeable	Min. V-0, 260 deg. C	ZPXK2	UL	
PWB	HANNSTAR BOARD CORP	MV-4	Min. V-0, 130 deg. C	ZPMV2	UL (E89382)	
PWB - Alternate	Interchangeable	Interchangeable	Min. V-0, 130 deg. C	ZPMV2	UL	
Indoor Label	Interchangeable	Interchangeable	Suitable for use on each type of surface to which applied, rated for maximum surface temperature specified, or 55 deg. C if not specified.	PGDQ2 or PGJI2	UL	
LED module Optional parts, See below	-	-	-	-	-	
1. LED module	Hanwha Vision Co Ltd	SPI-BWN0	Rated 24 Vdc	-	-	
1-1. Enclosure - BASE LED MODULE (Metal)	Interchangeable	Interchangeable	Aluminum, Min. 2.0 mm thickness.	-	-	
1-2. Internal metal parts	Interchangeable	Interchangeable	Aluminum, Min. 1.2 mm thickness.	-	-	
1-3. Internal Plastic parts	LOTTE CHEMICAL CORPORATION	HN-1068(+)(f1)	Min. 1.5 mm thickness, rated Min. V-0, 130 deg. C	QMFZ2	UL (E115797)	
1-3. Internal Plastic parts - Alternate	Interchangeable	Interchangeable	Min. 1.5 mm thickness, rated Min. V-0, 130 deg. C	QMFZ2	UL	
1-4. White LED (LD1 to LD 16) (Total 16 ea)	OSRAM	KW CSLPM1.TG	Vf = 3.5 Vdc (max),If = 5 000 mA Max	-	-	

1-5. Indicator, Green LED (LD17)	OSRAM	KP CSLNM1.F1	Vf = 3.5 Vdc (max),If = 3 000 mA Max	-	-	
1-6. Indicator, RED LED (LD18)	OSRAM	KR CSLNM1.23	Vf = 2.55 Vdc (max),If = 2 500 mA Max	-	-	
1-7. PWB	KI JOO INDUSTRIAL CO LTD	KJ4-V-0-2	Min. V-0, 130 deg. C	ZPMV2	UL (E111636)	
1-7. PWB - Alternate	Interchangeable	Interchangeable	Min. V-0, 130 deg. C	ZPMV2	UL	
1-8. FPWB	SI FLEX CO LTD	T4	Min. V-0, 260 deg. C	ZPXK2	UL (E218849)	
1-8. FPWB - Alternate	Interchangeable	Interchangeable	Min. V-0, 260 deg. C	ZPXK2	UL	
Filter cover Optional parts, See below	-	-	-	-	-	
1. Enclosure - Front Cover Filter included	Hanwha Vision Co Ltd	SPF-BCB0	Min. 2.0 mm thickness, See enclosure for dimension.	-	-	
1-1. Enclosure - FRONT COVER (Plastic)	LOTTE CHEMICAL CORPORATION	HN-1068(f1)	Min. 1.5 mm thickness, rated Min. V-0, 130 deg. C	QMFZ2	UL (E115797)	
1-2. Enclosure - FRONT WINDOW (Plastic)	Covestro Deutschland AG [PC Resins]	ET3113 + (z)(f1)	Min. 1.5 mm thickness, rated Min. HB, 115 deg. C	QMFZ2	UL (E41613)	

Enclosures

Type	Supplement Id	Description
Photographs	03-01	External View - 1
Photographs	03-02	External View - 2
Photographs	03-03	Internal View - 1
Photographs	03-04	Internal View - 2
Photographs	03-05	Network board View - 1
Photographs	03-06	Network board View - 2
Photographs	03-07	Power board View - 1
Photographs	03-08	Power board View - 2
Photographs	03-09	Sensor board View - 1
Photographs	03-10	Sensor board View - 2
Photographs	03-11	Port board View - 1
Photographs	03-12	Port board View - 2
Photographs	03-13	FPWB View - 1
Photographs	03-14	FPWB View - 2
Diagrams	04-01	Enclosure Diagram
Diagrams	04-03	Optional parts (Front cover filter included, model: SPF-BCB0) drawings
Manuals	06-01	Manual
Miscellaneous	07-01	Label

The following Page(s) are related to Diagrams-01. The next supplement, if applicable, will be identified with a new Supplement Page Heading.

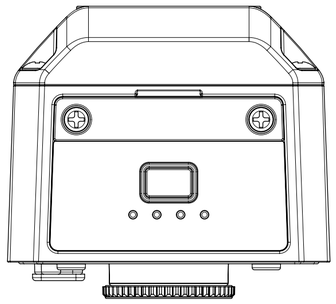

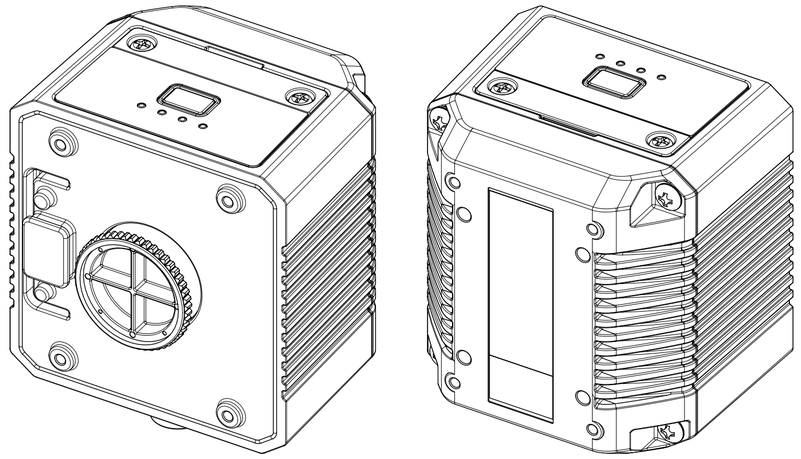

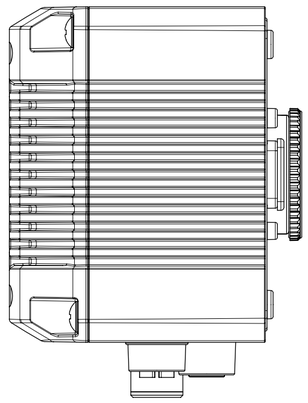

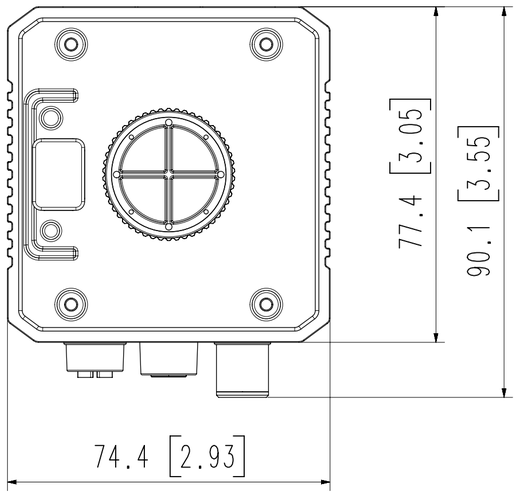

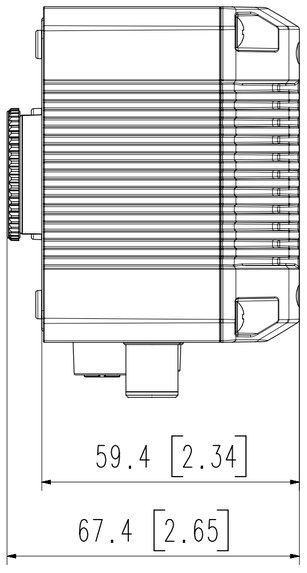

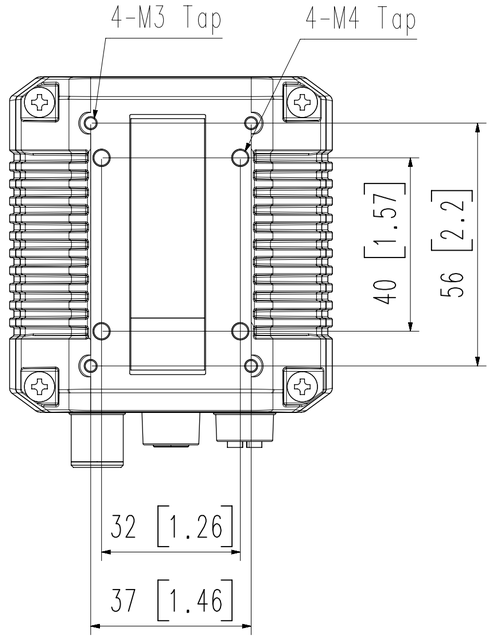

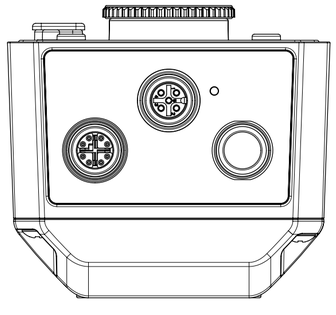

2	TNS-8000M	'25.05.08
1	TNS-7000M	'25.05.08
No.	MODEL NAME	DATE

Unit:mm[inch] | SCALE:1/1 | Hanwha Vision

A2

©Hanwha Vision Co.,Ltd. All rights reserved.

The following Page(s) are related to Diagrams-03. The next supplement, if applicable, will be identified with a new Supplement Page Heading.

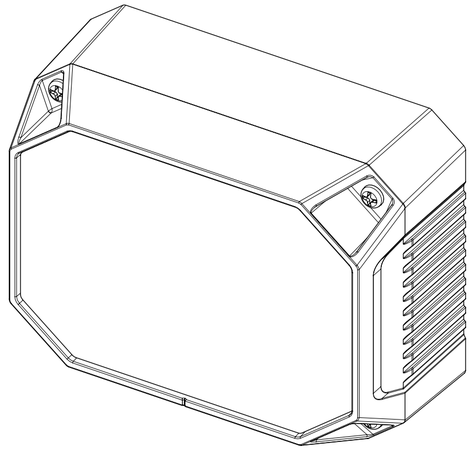

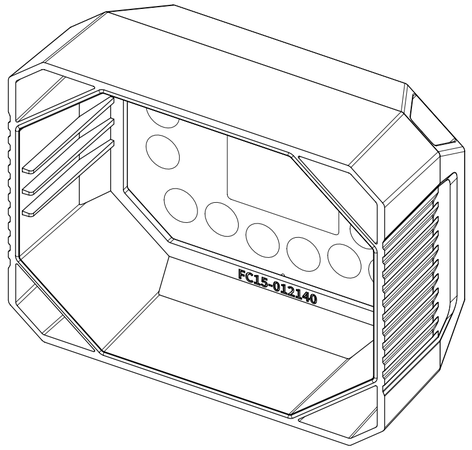

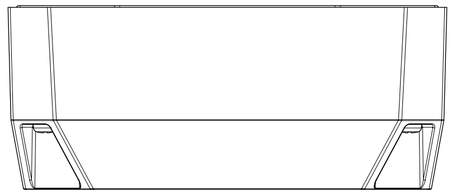

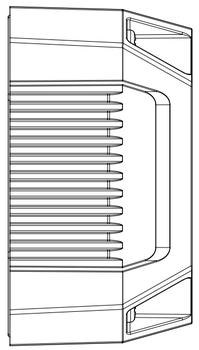

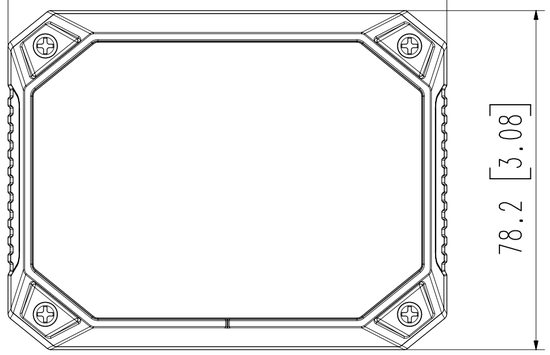

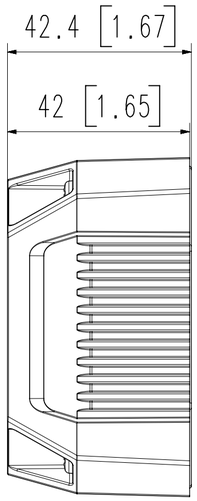

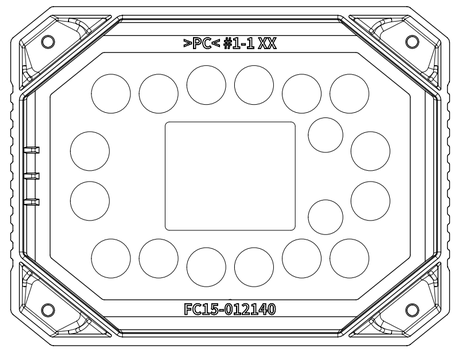

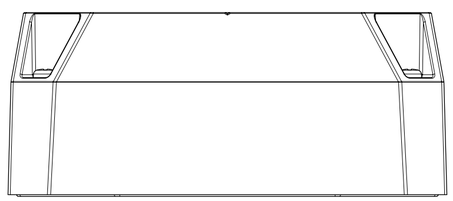

3	MODEL2	
2	MODEL1	
1	SPF-BCB0	'25.06.02
No.	MODEL NAME	DATE

Unit:mm[inch] | SCALE:1/1 | Hanwha Vision

A2

©Hanwha Vision Co.,Ltd. All rights reserved.

The following Page(s) are related to Manuals-01. The next supplement, if applicable, will be identified with a new Supplement Page Heading.

IMPORTANT SAFETY INSTRUCTIONS

1. Read these instructions.
2. Keep these instructions.
3. Heed all warnings.
4. Follow all instructions.
5. Do not use this apparatus near water.
6. Clean the contaminated area on the product surface with a soft, dry cloth or a damp cloth.
   (Do not use a detergent or cosmetic products that contain alcohol, solvents or surfactants or oil constituents as they may deform or cause damage to the product.)
7. Do not block any ventilation openings, Install in accordance with the manufacturer's instructions.
8. Do not install near any heat sources such as radiators, heat registers, stoves, or other apparatus (including amplifiers) that produce heat.
9. Do not defeat the safety purpose of the polarized or grounding-type plug. A polarized plug has two blades with one wider than the other. A grounding type plug has two blades and a third grounding prong. The wide blade or the third prong are provided for your safety. If the provided plug does not fit into your outlet, consult an electrician for replacement of the obsolete outlet.
10. Protect the power cord from being walked on or pinched particularly at plugs, convenience receptacles, and the point where they exit from the apparatus.
11. Only use attachments/ accessories specified by the manufacturer.
12. Use only with the cart, stand, tripod, bracket, or table specified by the manufacturer, or sold with the apparatus. When a cart is used, use caution when moving the cart/ apparatus combination to avoid injury from tip-over.



13. Unplug this apparatus during lighting storms or when unused for long periods of time.
14. Refer all servicing to qualified service personnel. Servicing is required when the apparatus has been damaged in any way, such as power-supply cord or plug is damaged, liquid has been spilled or objects have fallen into the apparatus, the apparatus has been exposed to rain or moisture, does not operate normally, or has been dropped.
15. This product is intended to be supplied by a UL Listed Power Supply Unit marked "Class 2" or "LPS" or "PS2" and rated from 24 Vdc, 0.31 A
16. This product is intended to be supplied by isolation power.
17. If you use excessive force when installing the product, the barcode reader may be damaged and malfunction. If you forcibly install the product using non-compliant tools, the product may be damaged.
18. Do not install the product in a place where chemical substances or oil mist exists or may be generated. As edible oils such as soybean oil may damage or warp the product, do not install the product in the kitchen or near the kitchen table.
    This may cause damage to the product.
19. When installing the product, be careful not to allow the surface of the product to be stained with chemical substance.
    Some chemical solvents such as cleaner or adhesives may cause serious damage to the product's surface.
20. If you install/disassemble the product in a manner that has not been recommended, the production functions/ performance may not be guaranteed.
    Install the product by referring to "Installation & connection" in the user manual.
21. Installing or using the product in water can cause serious damage to the product.
22. Install cables and wires away from high-voltage power sources and wiring. This will reduce the risk of damage or malfunction due to overvoltage, line noise, electrostatic discharge (ESD), power surges, and other causes of power supply issues.
23. The safety of any system incorporating this product is the responsibility of the assembler of the system.
24. This device has been verified using STP cable. The use of appropriate GND grounding and STP cable is recommended to effectively protect your product and property from transient voltage, thunderstroke, communication interruption.
25. The operating temperature of the product is -40°C to +55°C (-40°F ~ +131°F).

WARNING

TO REDUCE THE RISK OF FIRE OR ELECTRIC SHOCK, DO NOT EXPOSE THIS PRODUCT TO RAIN OR MOISTURE. DO NOT INSERT ANY METALLIC OBJECT THROUGH THE VENTILATION GRILLS OR OTHER OPENINGS ON THE EQUIPMENT.

Apparatus shall not be exposed to dripping or splashing and that no objects filled with liquids, such as vases, shall be placed on the apparatus.

To prevent injury, this apparatus must be securely attached to the Wall/ceiling in accordance with the installation instructions.

CAUTION

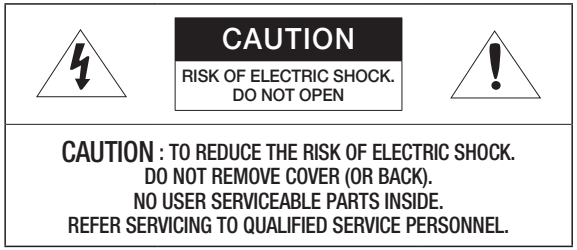

EXPLANATION OF GRAPHICAL SYMBOLS



The lightning flash with arrowhead symbol, within an equilateral triangle, is intended to alert the user to the presence of "dangerous voltage" within the product's enclosure that may be of sufficient magnitude to constitute a risk of electric shock to persons.



The exclamation point within an equilateral triangle is intended to alert the user to the presence of important operating and maintenance (servicing) instructions in the literature accompanying the product.

Class I construction

An apparatus with CLASS I construction shall be connected to a MAINS socket outlet with a protective earthing connection.

Battery

Batteries(battery pack or batteries installed) shall not be exposed to excessive heat such as sunshine, fire or the like.

The battery cannot be replaced.

Prohibition of battery abuse

- Do not install and use the wrong type of battery.
- Do not leave the battery in a mechanically crush or cut it because it can explode.
- Do not leave the battery in a high temperature environment.
- Do not leave the battery in a low-pressure environment.

Disconnection Device

Disconnect the main plug from the apparatus, if it's defected. And please call a repair man in your location.

When used outside of the U.S., it may be used HAR code with fittings of an approved agency is employed.

CAUTION

RISK OF EXPLOSION IF BATTERY IS REPLACED BY AN INCORRECT TYPE.
DISPOSE OF USED BATTERIES ACCORDING TO THE INSTRUCTIONS.

ATTENTION

IL Y A RISQUE D'EXPLOSION SI LA BATTERIE EST REMPLACÉE PAR UNE BATTERIE DE TYPE INCORRECT.
METTRE AU REBUT LES BATTERIES USAGÉES CONFORMÉMENT AUX INSTRUCTIONS.

These servicing instructions are for use by qualified service personnel only.
To reduce the risk of electric shock do not perform any servicing other than that contained in the operating instructions unless you are qualified to do so.

Please use the input power with just one barcode reader and other devices must not be connected.

When a new product box is opened (or during the initial use of the product), moisture might build up on the glass of the barcode reader. The built-up moisture disappears naturally within a few hours after powered on.

Do not arbitrarily loosen or tighten the gore valve.

Do not expose the image sensor to laser light. Image sensors can be damaged by direct, or reflected, laser light. If your application requires laser light that might strike the image sensor, use a lens filter at the corresponding laser wavelength. For suggestions, contact your local integrator or application engineer.

There are no user serviceable parts in this product. The product will not be covered by the warranty if it is disassembled or repaired by the user.

Ensure that the cable bend radius begins at least six inches from the connector. Cable shielding can be degraded or cables can be damaged or wear out faster if a service loop or bend radius is tighter than 10x the cable diameter.

Make sure to connect/disconnect the power input and LED light cables with the power off.
Connecting them while the power is on may cause a malfunction or damage to the product.
A network camera near the LED lights may expose to horizontal line noise (caused by the flicker phenomenon).

In this case, be sure to set the anti-flicker function of the network camera to <ON>.

If horizontal line noise occurs even when the anti-flicker function is set to <ON>, adjust the camera to prevent overlapping angles between LED lights and the network camera.

Please read the following recommended safety precautions carefully.

- Do not place this apparatus on an uneven surface.
- Do not install on a surface where it is exposed to direct sunlight, near heating equipment or heavy cold area.
- Do not place this apparatus near conductive material.
- Do not attempt to service this apparatus yourself.
- Do not place a glass of water on the product.
- Do not install near any magnetic sources.
- Do not block any ventilation openings.
- Do not place heavy items on the product.
- Please wear protective gloves when installing/removing the barcode reader.
  The high temperature of the product surface may cause burn.

User's Manual is a guidance book for how to use the product.

The meaning of the symbols are shown below.

- Reference : In case of providing information for helping of product's usages
- Notice : If there's any possibility to occur any damages for the goods and human caused by not following the instruction

※ Please read this manual for the safety before using of goods and keep it in the safe place.

We do not guarantee the quality of third-party products (e.g. lenses, accessories) that you separately purchase.

In particular installation environments, there might be interference in radio communications. When interference of electromagnetic waves occurs between the product and radio communication device, it is recommended to keep a certain distance between the two or change the direction of the receiving antenna.

WHAT'S INCLUDED

Please check if your barcode reader and accessories are all included in the product package.
(As for each sales country, accessories are not the same.)

Appearance	Item Name	Quantity	Description
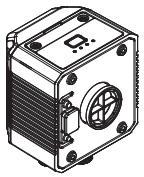	Barcode reader	1	
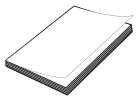	Quick Guide (Optional)	1	

OPTIONAL ACCESSORIES FOR INSTALLATION

You can install it after purchasing the following separately sold product.

Item Name	Appearance	Description	Model Name
Lens		Lens for barcode reader mounting	SLM-5M06 SLM-5M08 SLM-5M12 SLM-5M16 SLM-5M25
LED Module	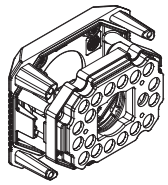	LED lighting device	SPI-BWN0 SPI-BWM0 SPI-BWM1 SPI-BWW0
Front Cover Filter included	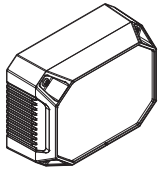	Case to protect the lens unit	SPF-BCB0 (Polarizing filter: SPF-BPB0) (Diffusion filter: SPF-BDB0)
Installation bracket	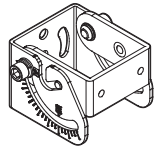	Barcode reader installation bracket	SBO-BPM0

* Product shape may vary depending on the model name.

AT A GLANCE

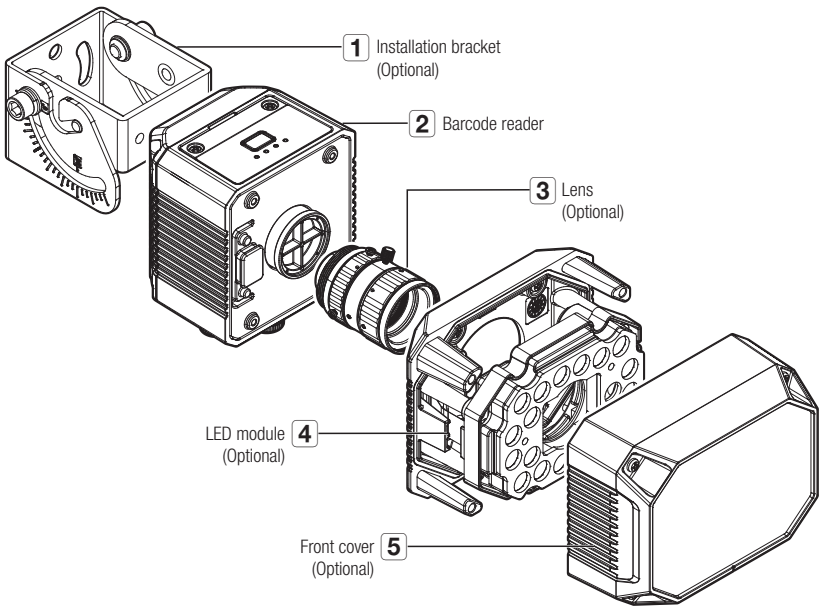

Barcode reader

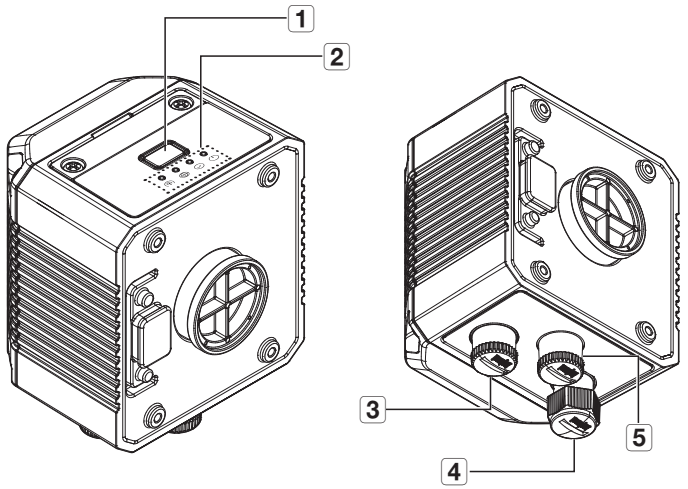

Item		Description
1 Trigger & Reset button		A short press of the button resets the switch trigger settings to factory defaults, while a long press (10 seconds) of the button resets the barcode reader settings to factory defaults.
2 LED Indicator		Displays trigger status Occurred: Blue ON Not occurred: OFF
		Displays network connection Connected: Green ON Not connected: OFF
		Displays reading results Read: Green ON Not read: Red ON (in trigger mode)
		Displays power status Power on: Green ON Power off: OFF
3 Network terminal		A terminal that connects to the switch hub and network cable for network connection.
4 External light connection terminal		A terminal that connects to an external lighting device.
5 Power input (DC 24 V) terminal		A terminal that connects to the power cable.

ASSEMBLING

Assembling the lens (separately sold)

1. Remove the lens cap before assembling the lens.

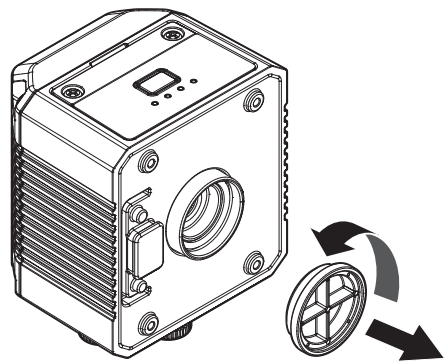

2. Assemble the lens to the barcode reader.
   - If the fixing screw is in the '**X**' area, move it to the '**O**' area to assemble.

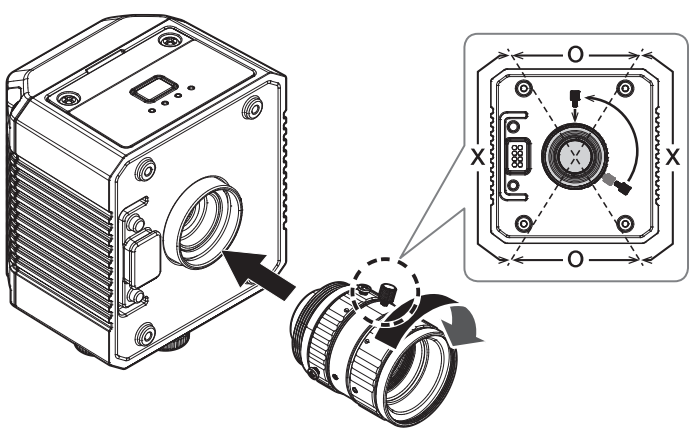

Assembling LED module (separately sold)

1. Remove the pogo pin cap before assembling the LED module.

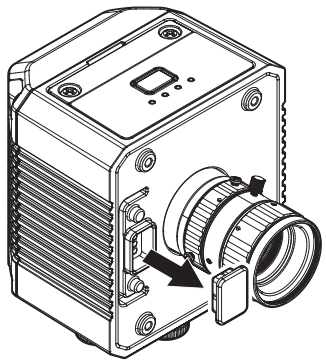

2. Assemble the LED module by tightening the fastening screws on the LED module.
   - Check the location of pogo pins during assembling.

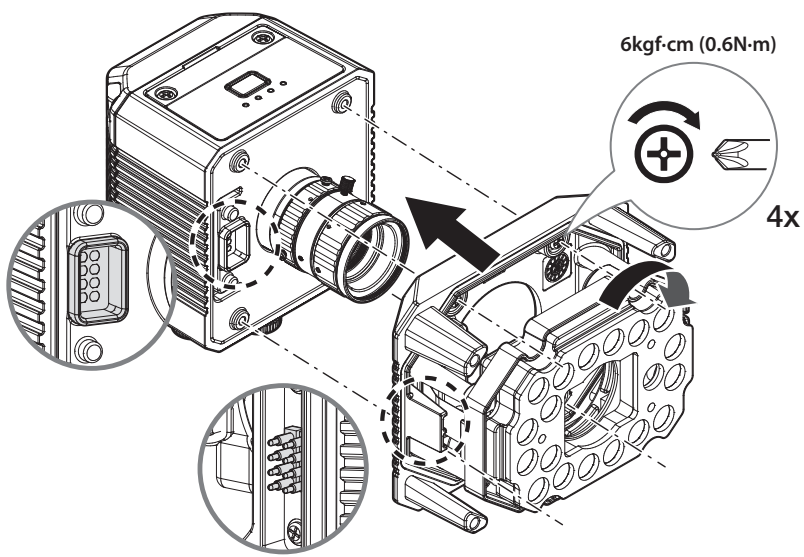

Assembling the front cover (separately sold)

1. Add the absorbent included in the front cover product.
2. Assemble the front cover by tightening the fastening screws on the front cover.

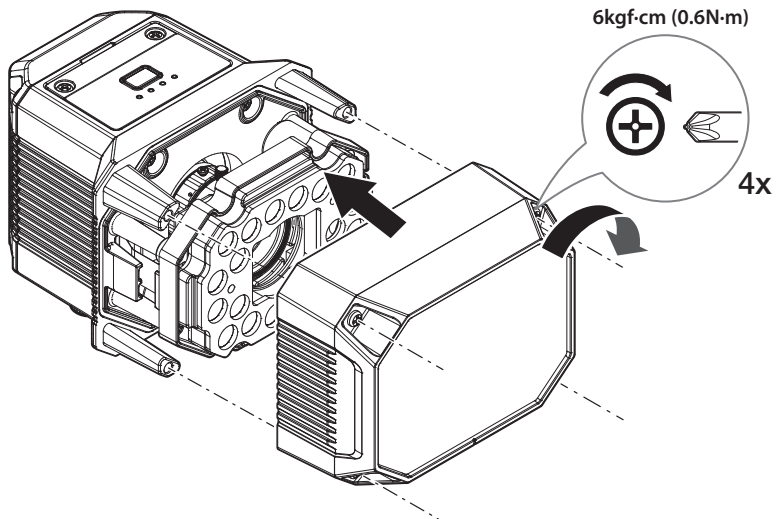

- When assembling the front cover, assemble it by referring to the indicated protrusion. If assembled conversely, the front cover cannot be assembled.

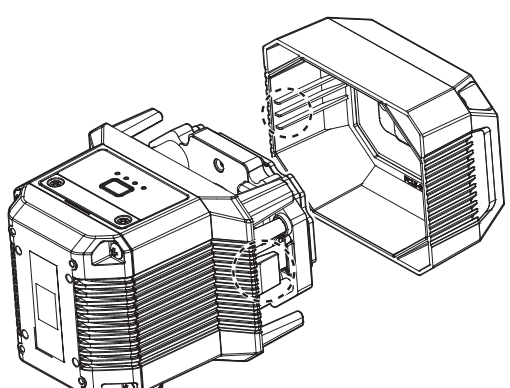

Assembling the bracket (separately sold)

1. Remove the angle fixing screws. Remove the angle fixing screws on the installation bracket.

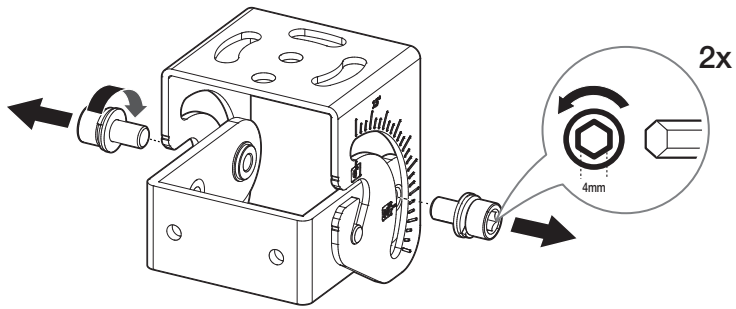

2. Detach the installation bracket as shown in the figure.

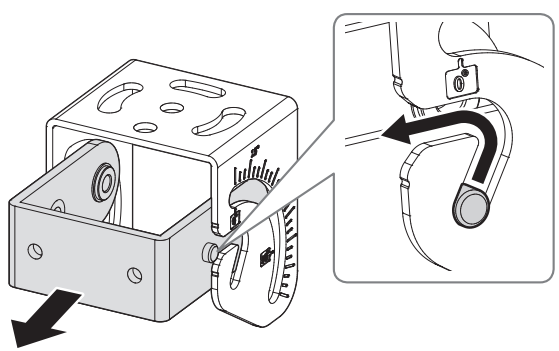

3. Assemble the detached installation bracket to the fixing hole.

- Select a fixing hole and install it according to the installation angle and environment.

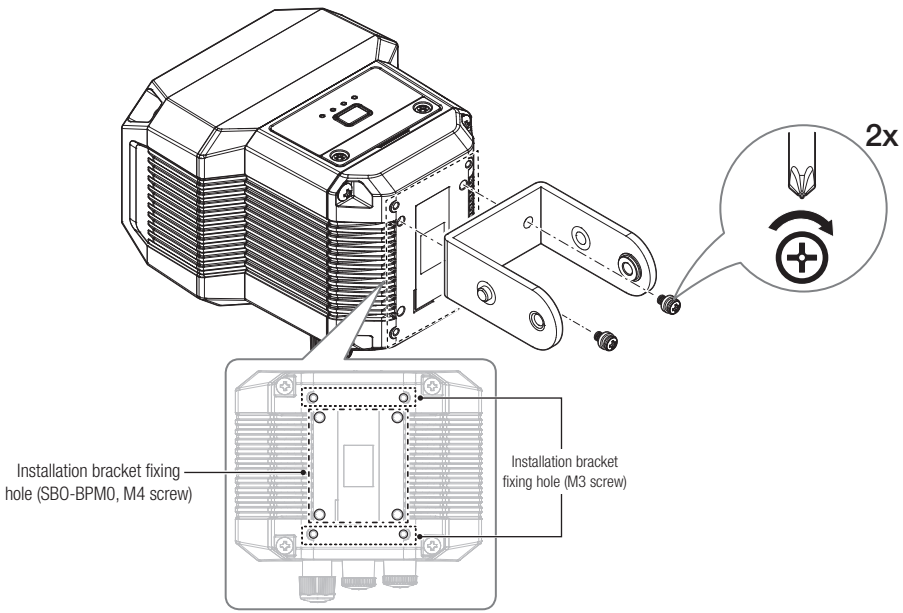

INSTALLATION

- The jack connected to the external cable is not waterproof unless a protective cap or M12 cable is connected. For waterproofing, a protective cap or M12 cable must be connected.

Precautions before installation

Ensure you read out the following instructions before installing the barcode reader:

- Select an installation site that can hold at least 5 times the barcode reader's weight.
- Stuck-in or peeled-off cables can cause damage to the product or a fire.
- For safety purposes, keep anyone away from the installation site.
  And put aside personal belongings from the site, just in case.
- If the product is forcibly installed with excessive force, it may malfunction and damage the barcode reader.
  Forcing assembly using non-standard tools may damage the product.
- Make sure to connect/disconnect the power input and LED light cables with the power off.
  Connecting them while the power is on may cause a malfunction or damage to the product.
- A network camera near the LED lights may expose to horizontal line noise (caused by the flicker phenomenon).
  In this case, be sure to set the anti-flicker function of the network camera to <ON>.
  If horizontal line noise occurs even when the anti-flicker function is set to <ON>, adjust the camera to prevent overlapping angles between LED lights and the network camera.

Inserting a Micro SD card

1. Loosen the two screws on the micro SD cover by turning them counterclockwise.

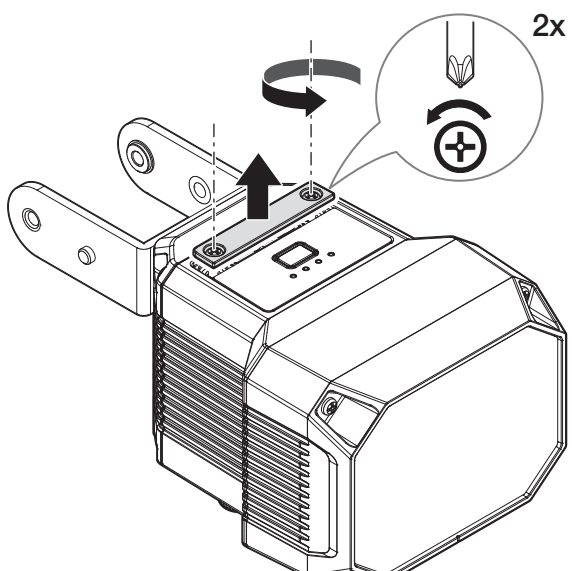

2. Insert a micro SD card in the direction of the arrow shown in the figure.

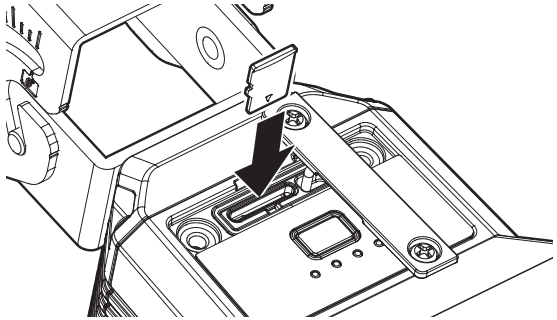

- Do not forcefully insert it in the reverse direction. It might damage your Micro SD card and your product.

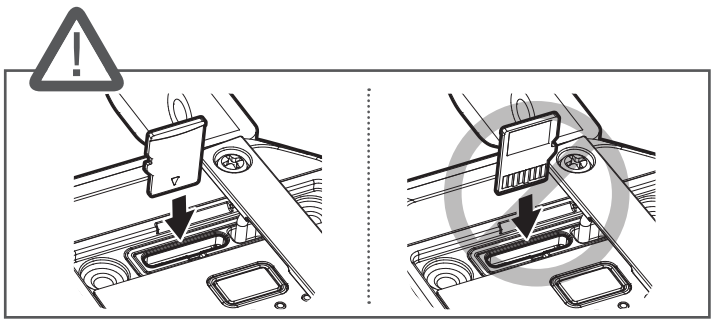

- Before installing the barcode reader, the Micro SD card should be inserted while the power source and the body are separated.
- When it rains or the humidity is high, insertion or ejection of a Micro SD card is not recommended.
- When installing/removing the Micro SD card, make sure you put the product body on a flat ground before working on it in order to prevent accidents due to loss or drop of any parts.

3. After inserting the micro SD card, assemble in the reverse order of disassembly.

- When assembling the micro SD cover, pay attention to the direction of the anti-detachment rubber ring.

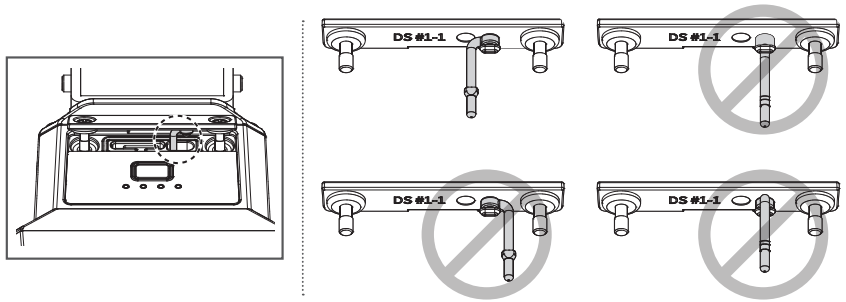

Removing a Micro SD card

Gently press down on the exposed end of the Micro SD card as shown in the diagram to eject the Micro SD card from the slot.

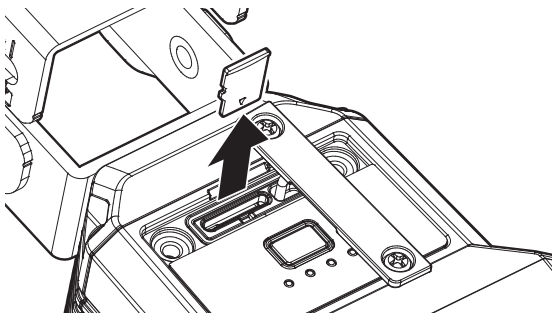

- Before removing the Micro SD card, in <**Setup ( )**>-<**Event**>-<**Storage**>, set the device to <**Off**> and press the [**Apply**] button and turn the barcode reader off.
- If you turn off the barcode reader or remove the Micro SD card that contains data from the product, the data may be lost or damaged.

Installation

1. Fix the bracket to the installation surface using appropriate screws.
   - There are five screw holes, and use at least two screws to secure them.

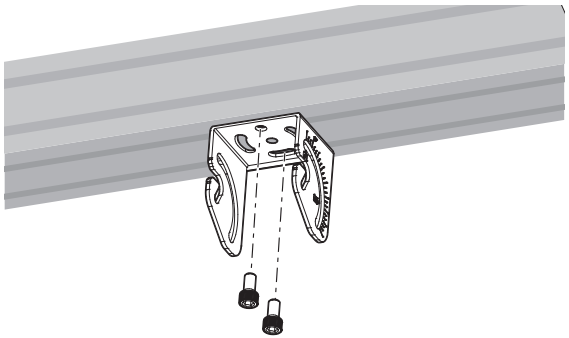

2. Adjust the angle after assembling the barcode reader to the bracket.
3. Once angle adjustment is complete, secure it by tightening the angle fixing screws.

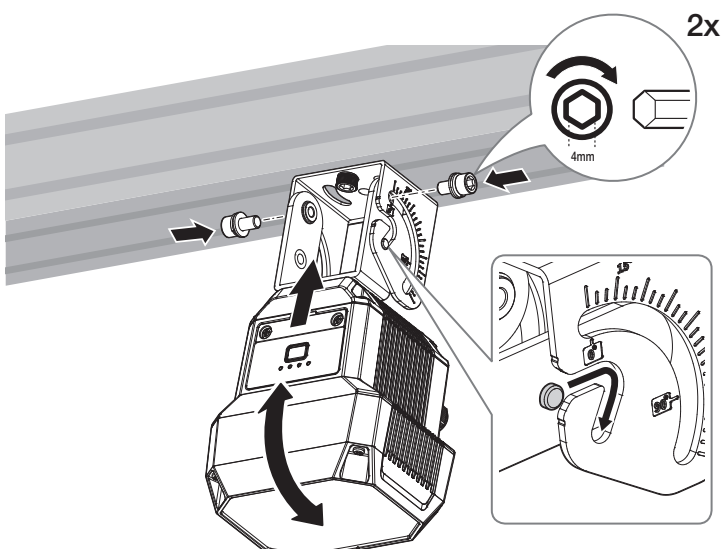

4. Remove the cable cap before connecting the cable.

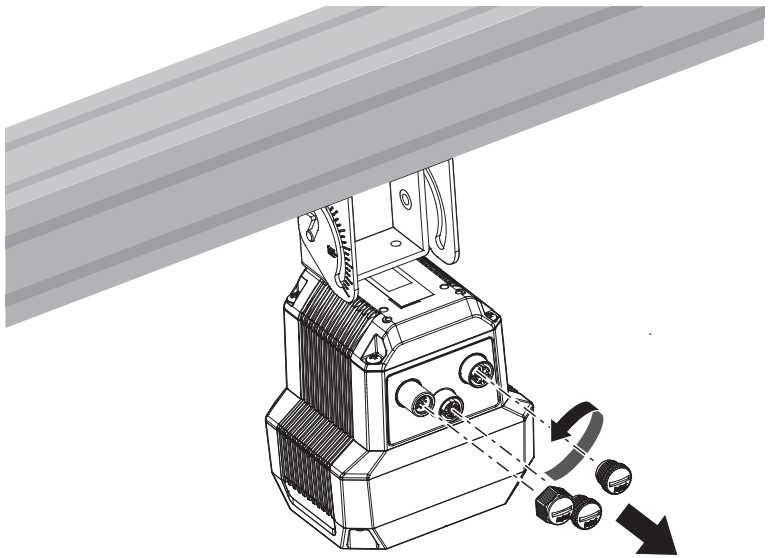

- If the cable cap cannot be removed, use a flathead screwdriver to remove it.

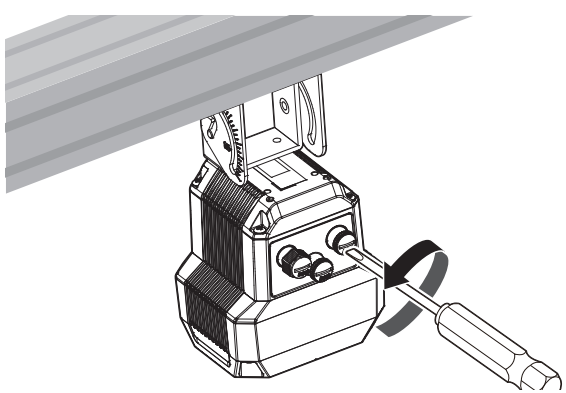

5. Connect the network, power and light cables. Make sure to use cables that meet the specifications (300 V, 80 ºC, VW-1 (UL approved)).

- When connecting an external lighting device, connect the network and power cables in consecutive order after connecting the external lighting device.

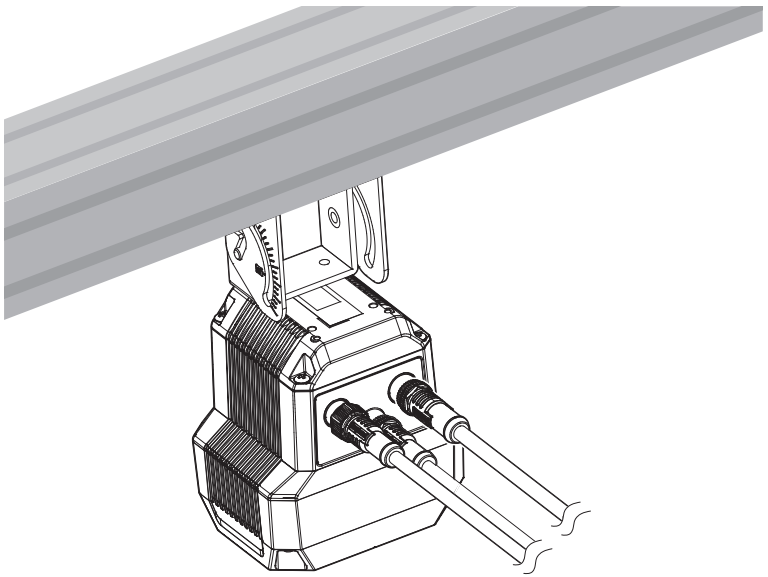

6. After completing the cable installation, supply power.

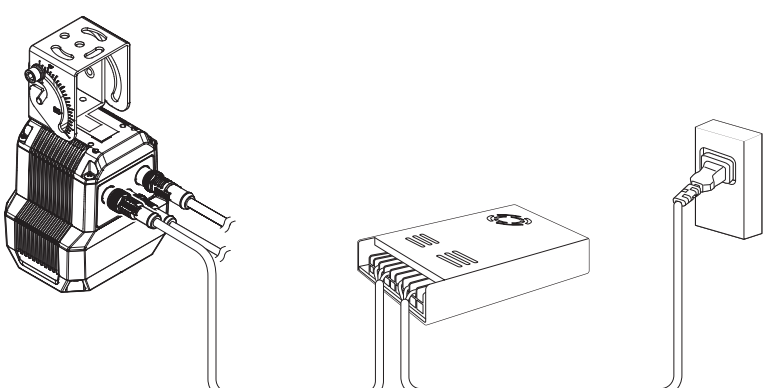

7. Remove the front cover for focus adjustment.

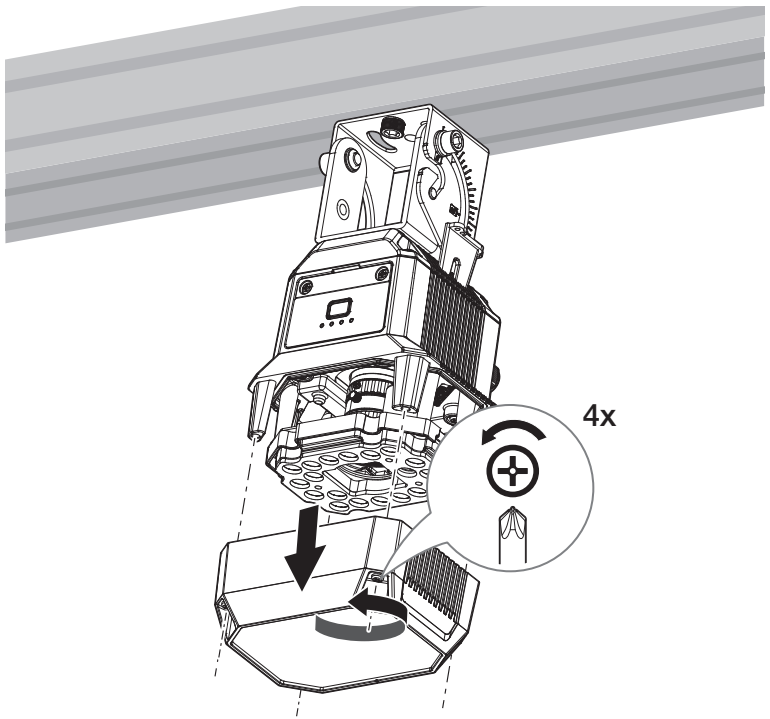

8. Loosen the focus fixing screw by turning it twice counterclockwise.
9. Adjust focus using the focus adjustment ring.
10. Once focus adjustment is complete, fasten it by turning the focus fixing screw clockwise.

- Product shape may vary depending on the lens model.
- Be careful not to fully loosen the focus fixing screw.

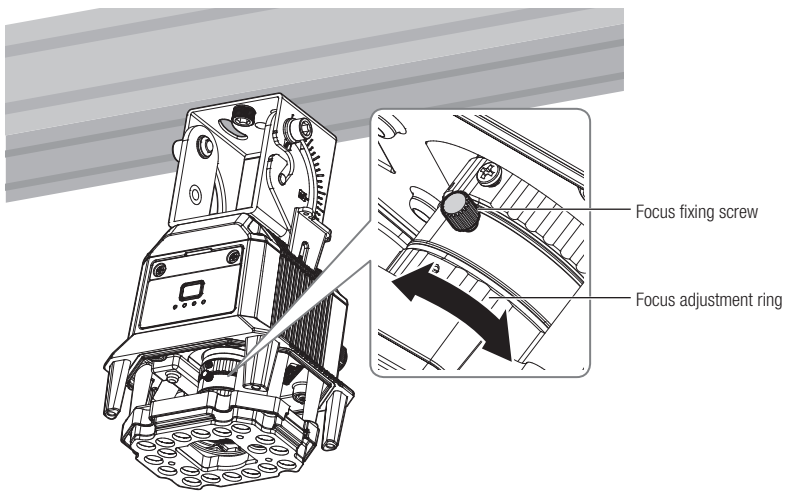

11. Add the absorbent included in the front cover product.
12. Assemble the front cover by tightening the fastening screws on the front cover.

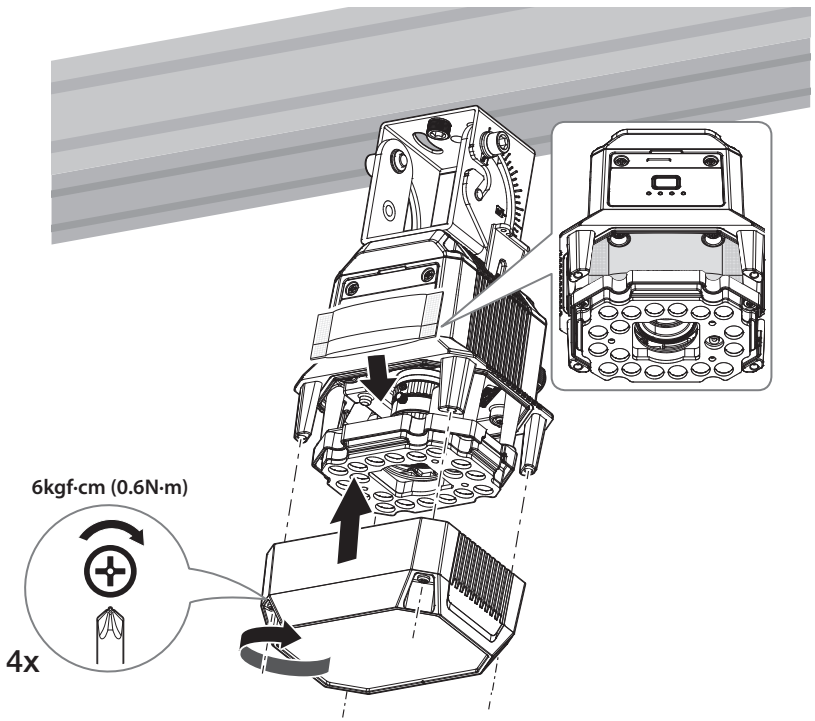

- Be careful that the absorbent is not caught between the front cover and the gasket around the camera.

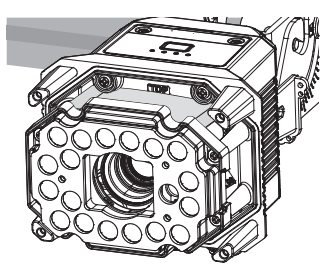

BARCODE READER, TNS-7000M

DC 24V ⎓ 0.31A

ITE

c UL US LISTED

9T96 E158873

M/C:TNS-70000M/KEX Fac.ID:D

DATE S/N: Serial No.

MAC ADDRESS: XX-XX-XX-XX-XX-XX

CAN ICES-3(A)/NMB-3(A)

HANWHA VISION CO.,LTD.

MADE IN KOREA

Photographs-01 Page-1

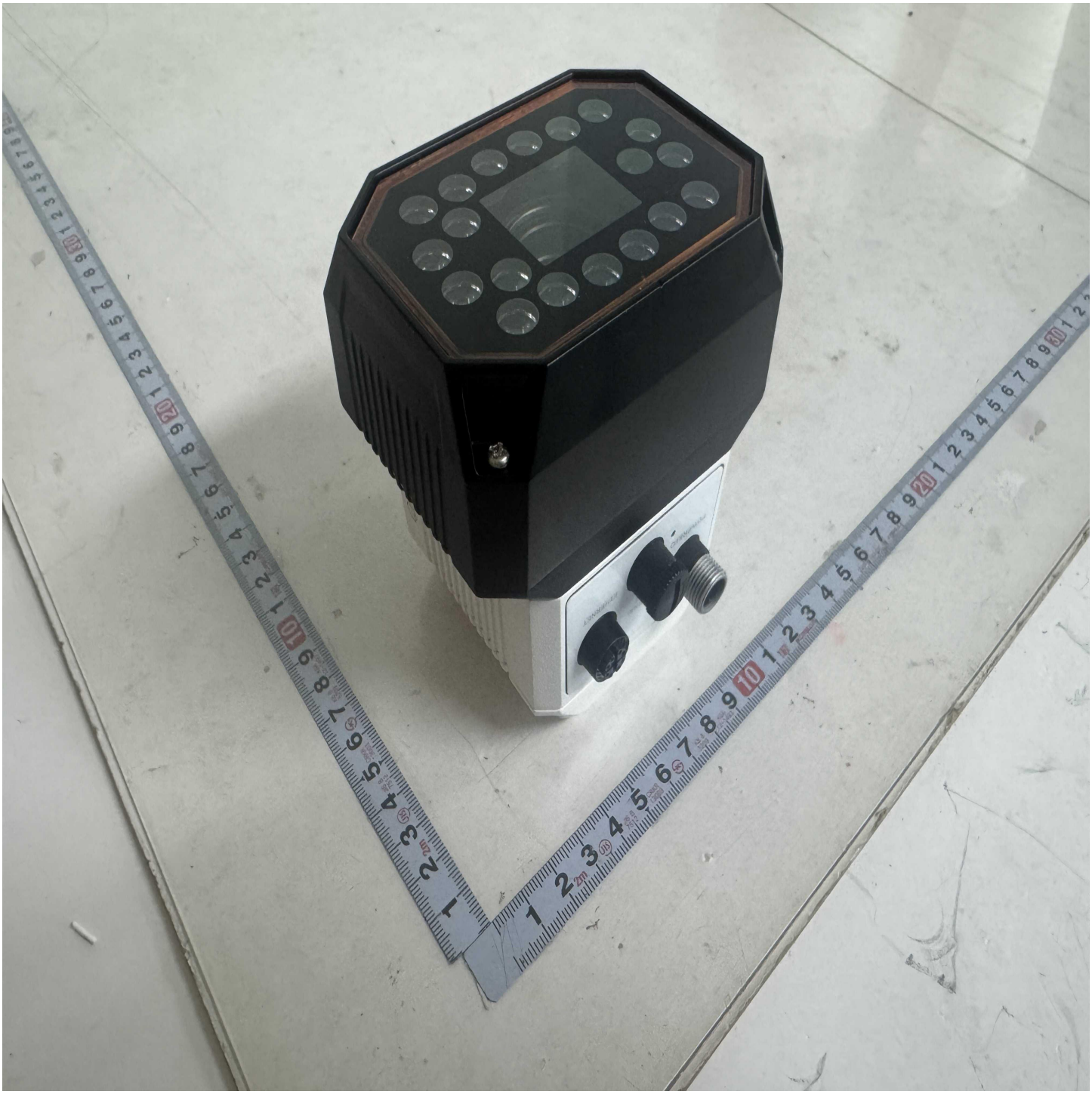

Photographs-02 Page-1

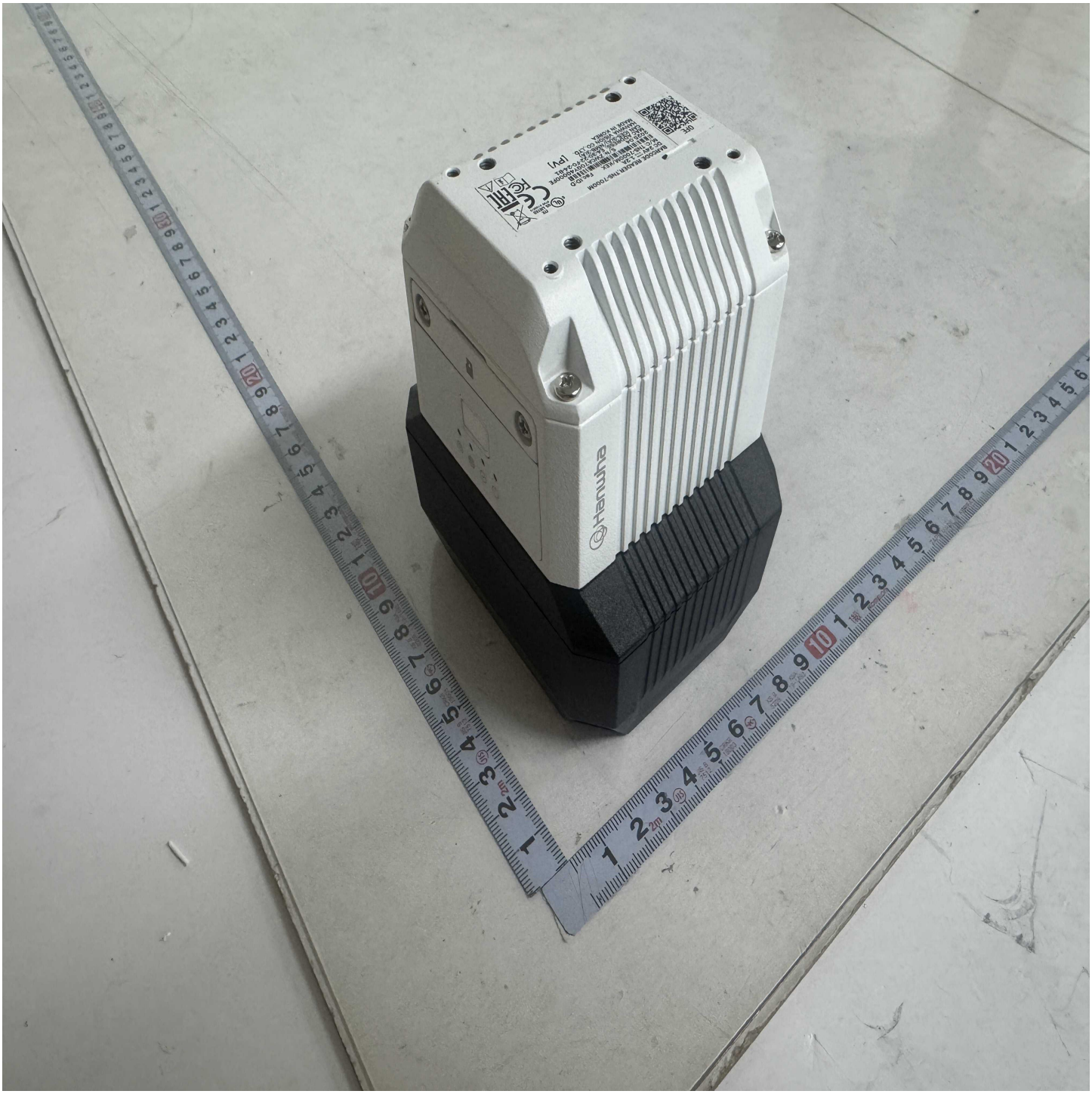

Photographs-03 Page-1

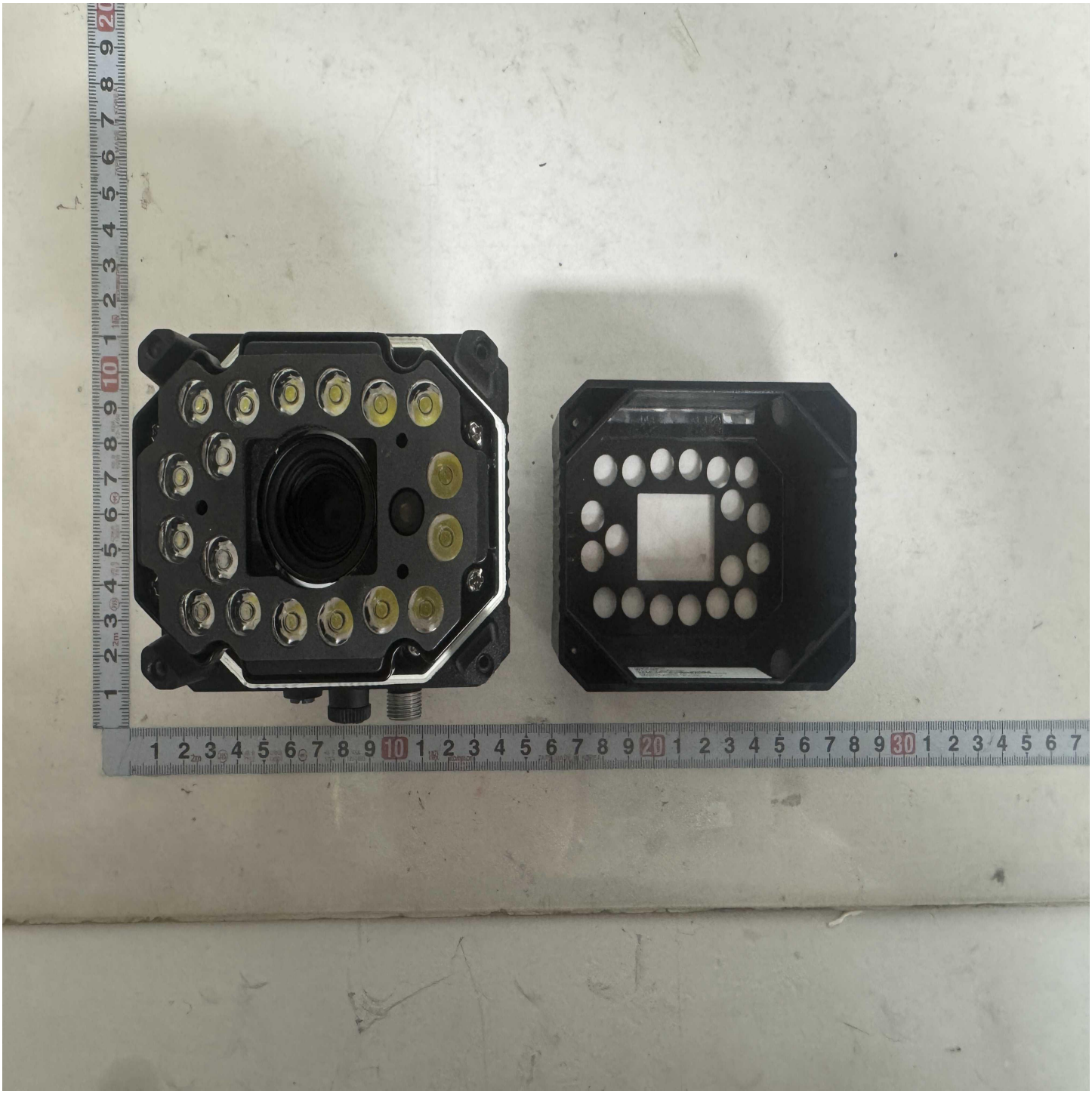

Photographs-04 Page-1

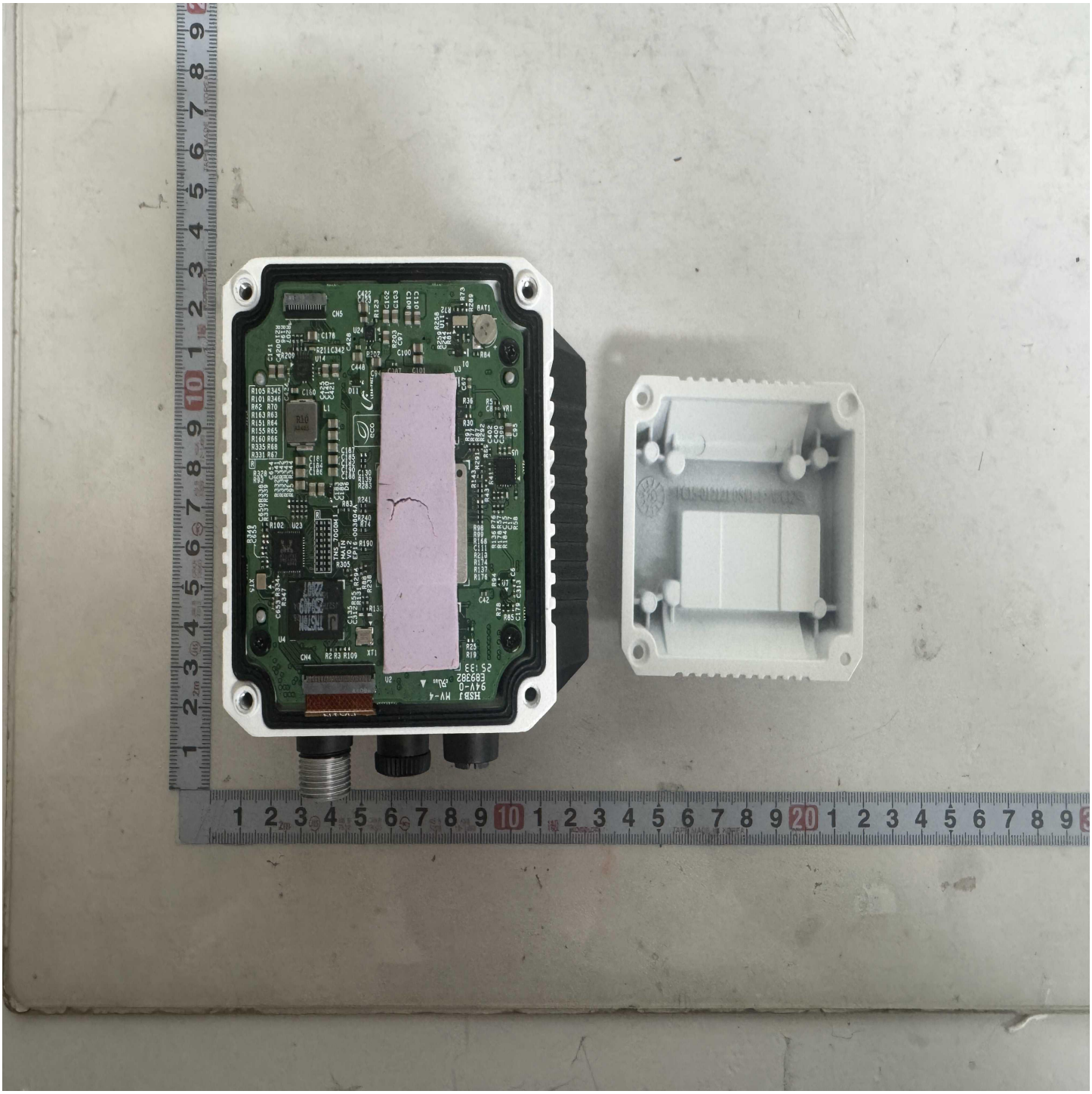

Photographs-05 Page-1

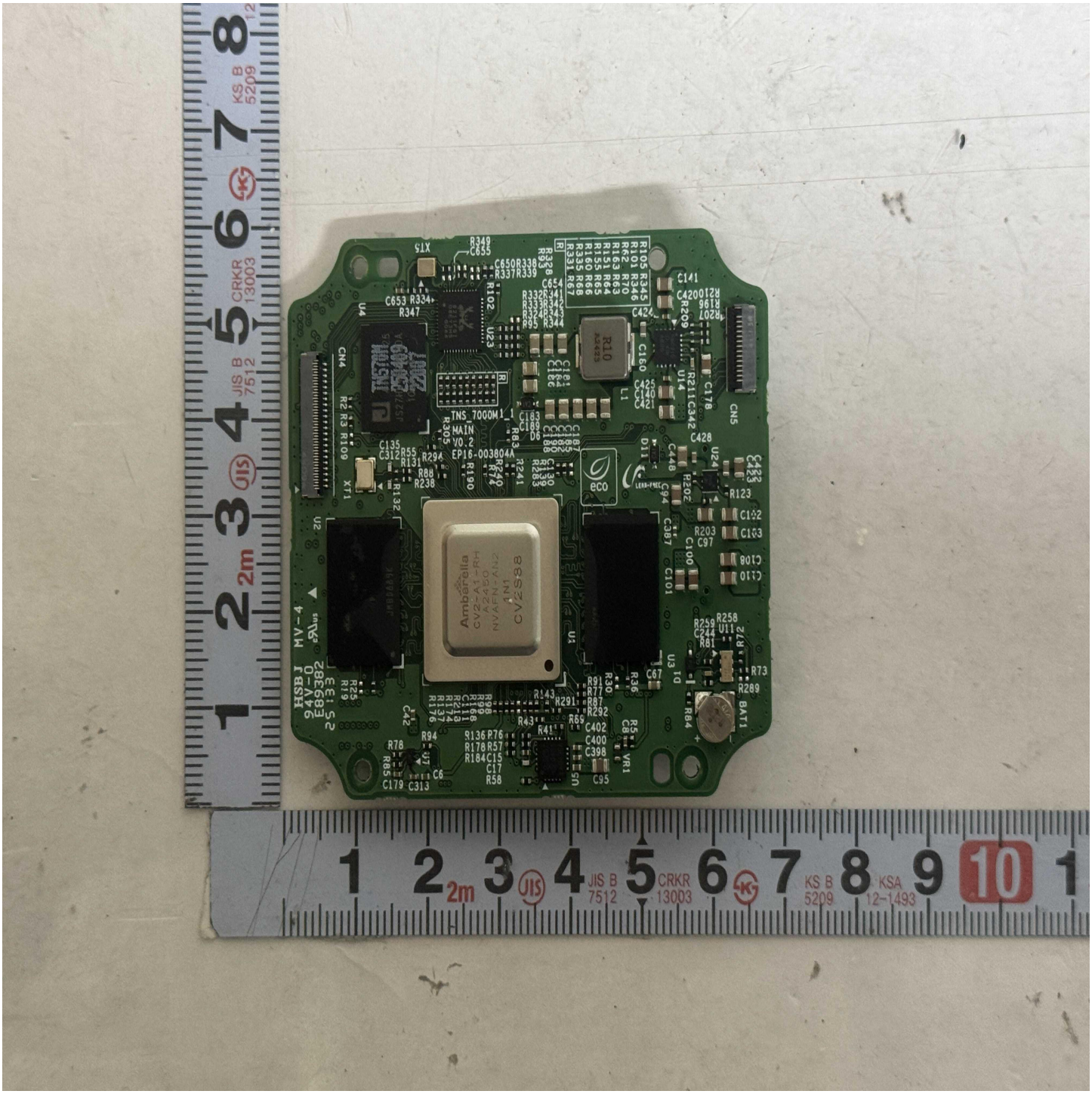

Photographs-06 Page-1

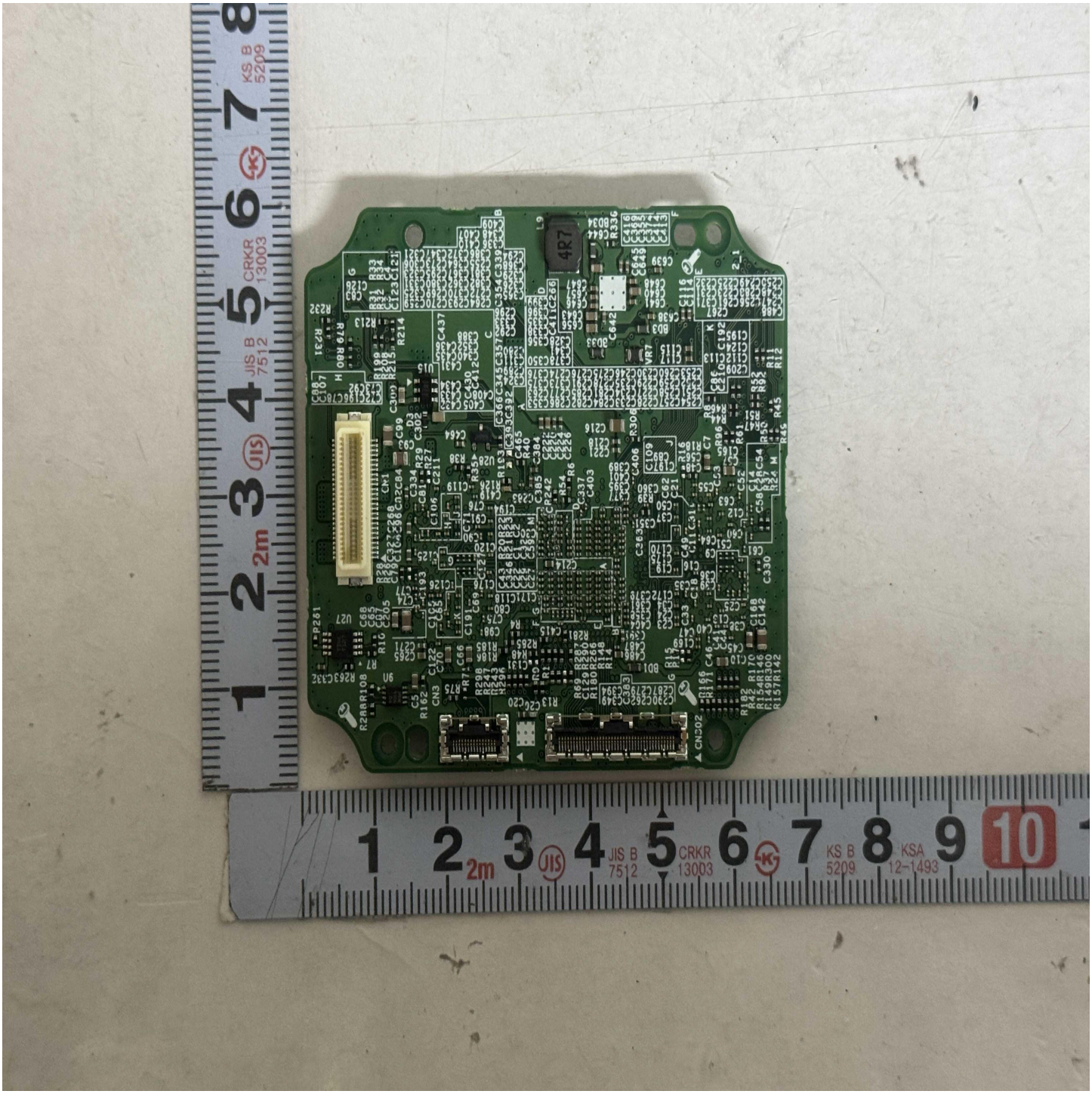

Photographs-07 Page-1

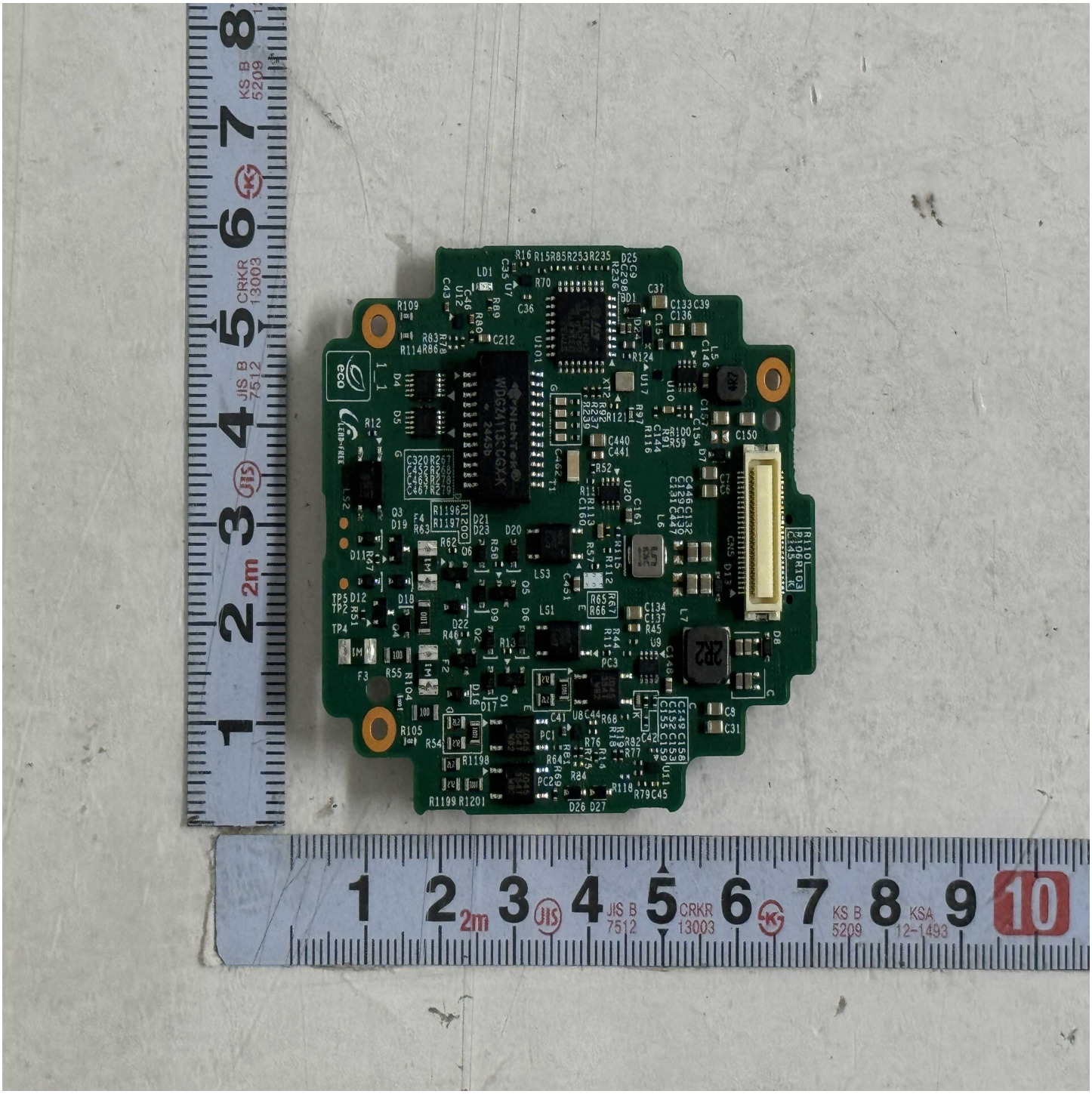

Photographs-08 Page-1

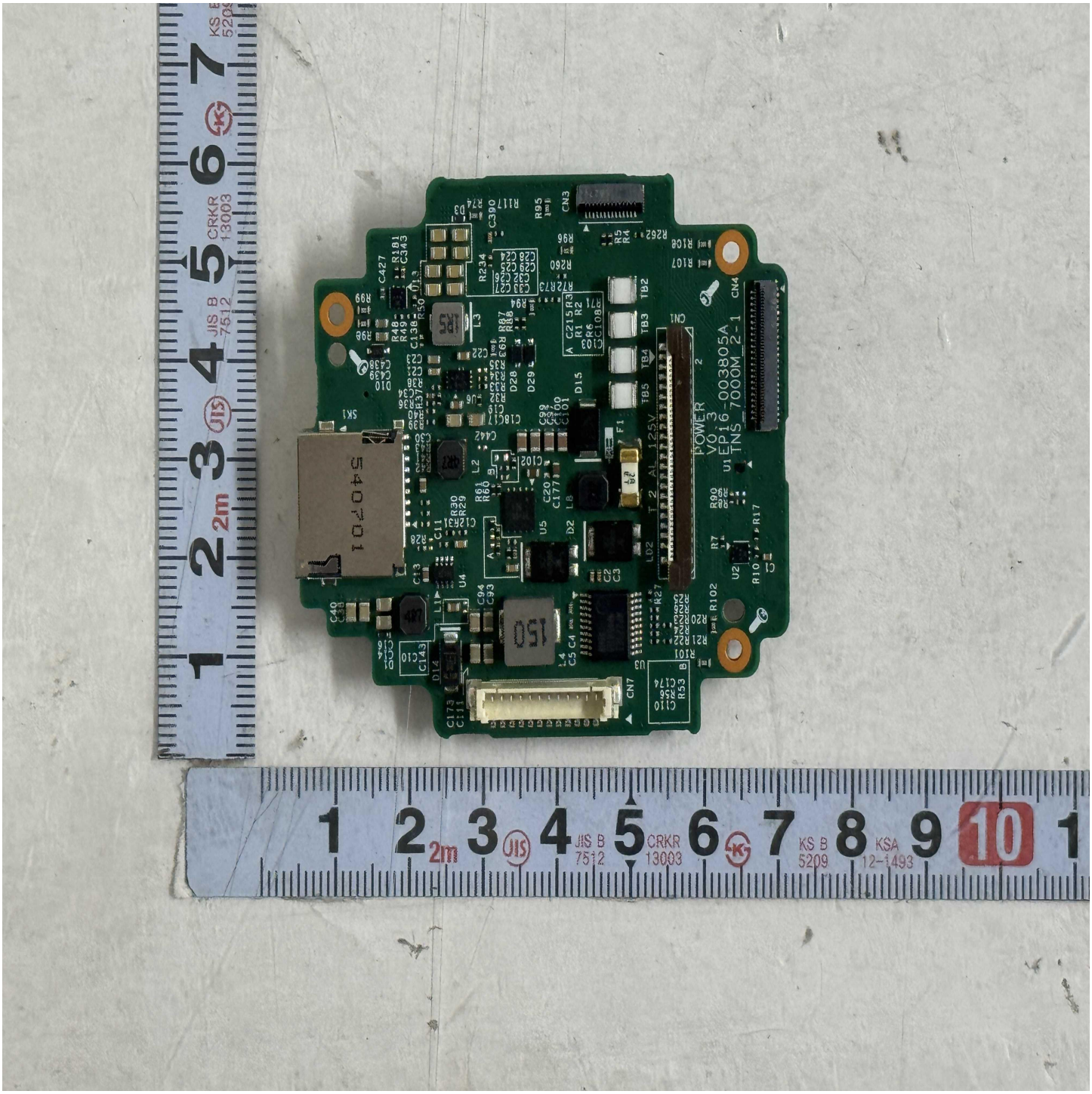

Photographs-09 Page-1

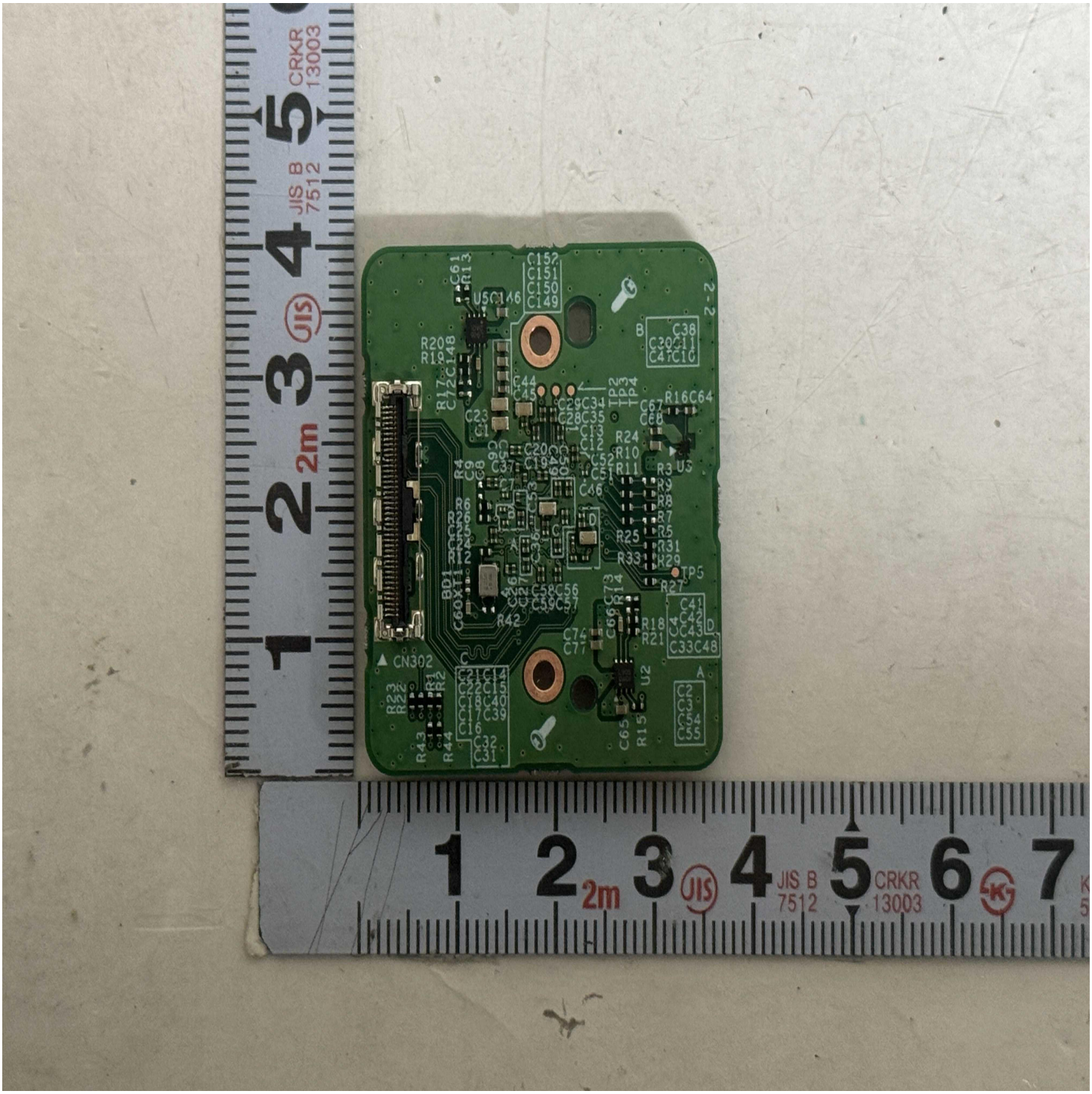

Photographs-10 Page-1

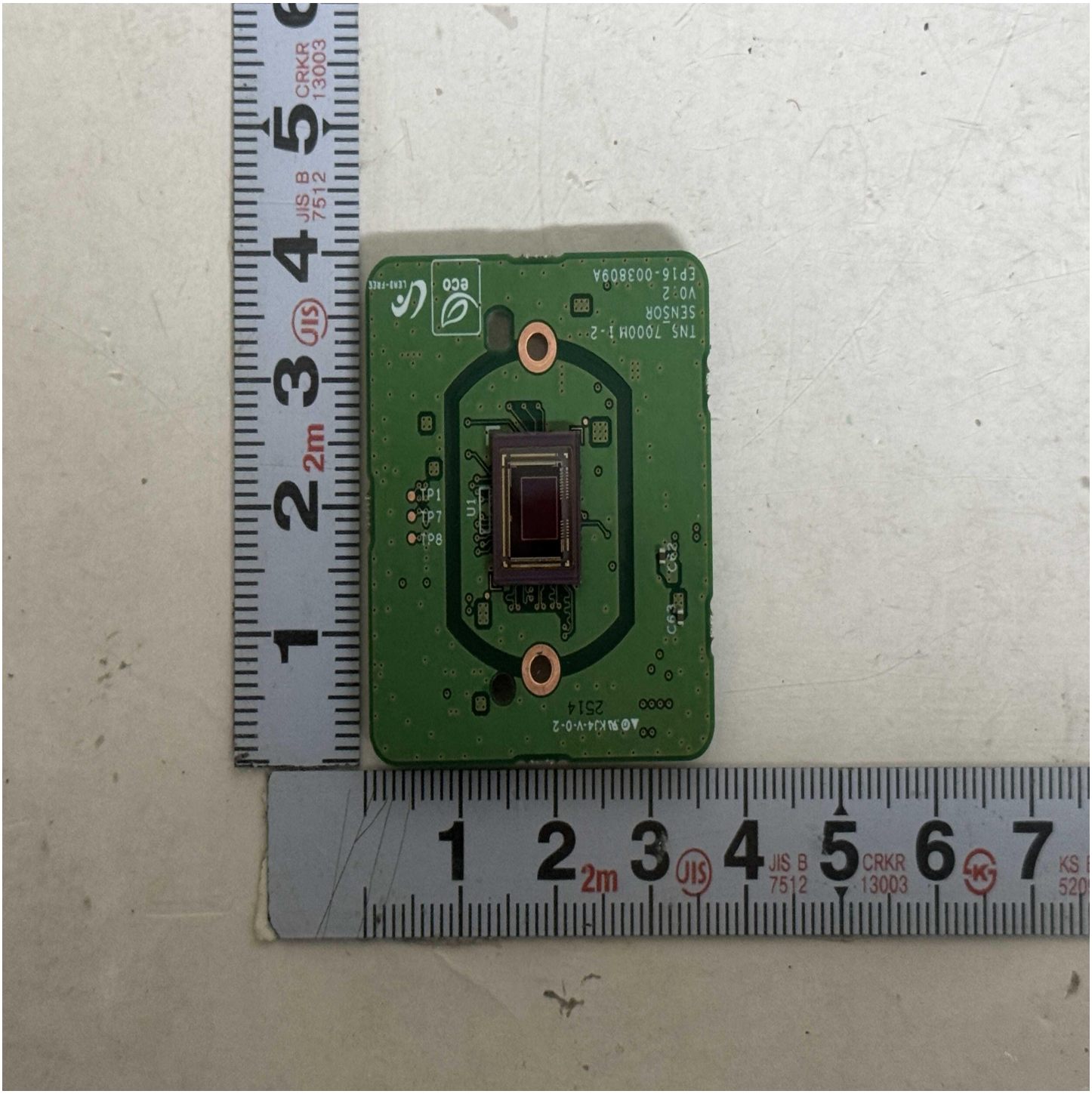

Photographs-11 Page-1

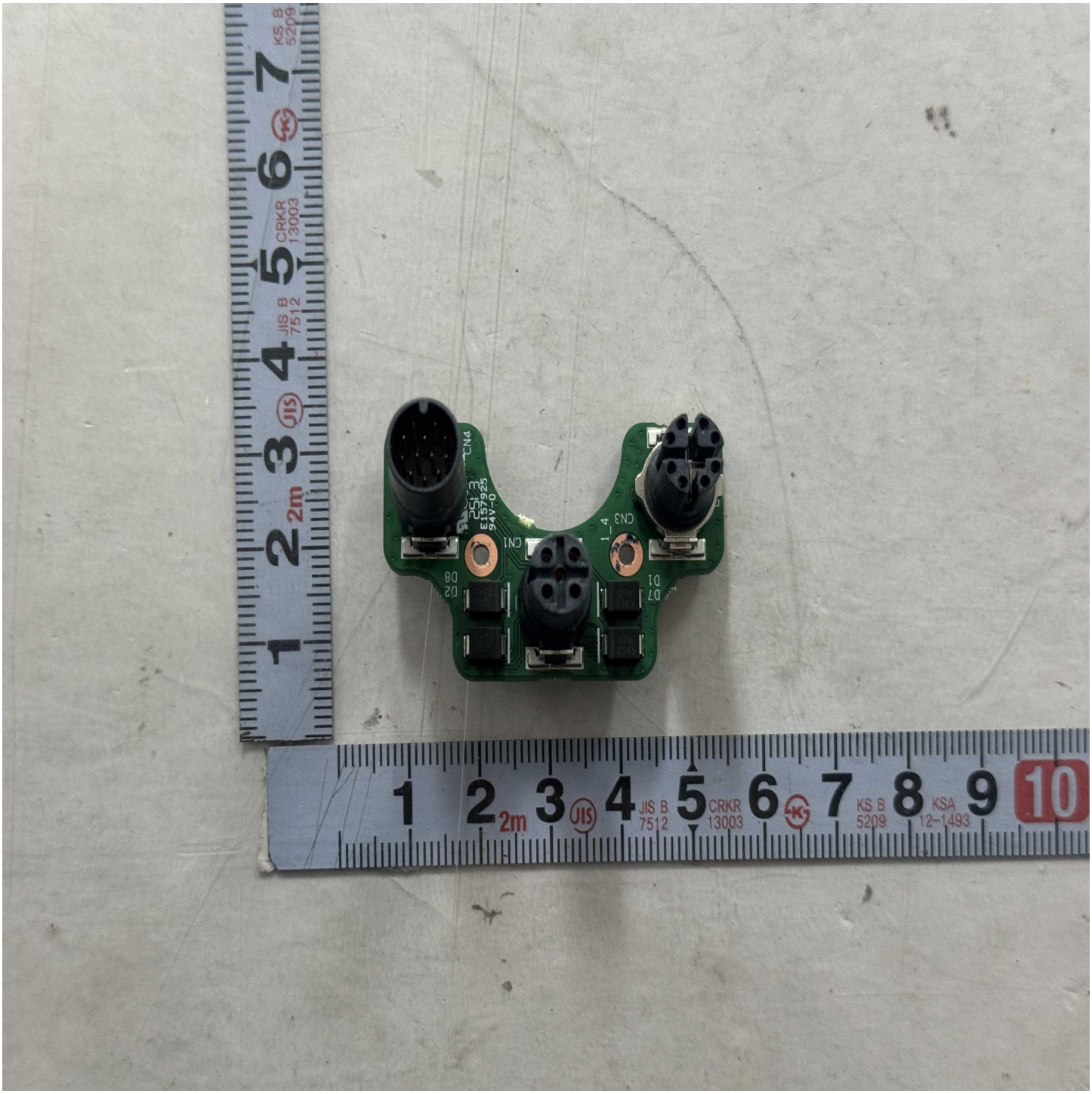

Photographs-12 Page-1



Photographs-13 Page-1

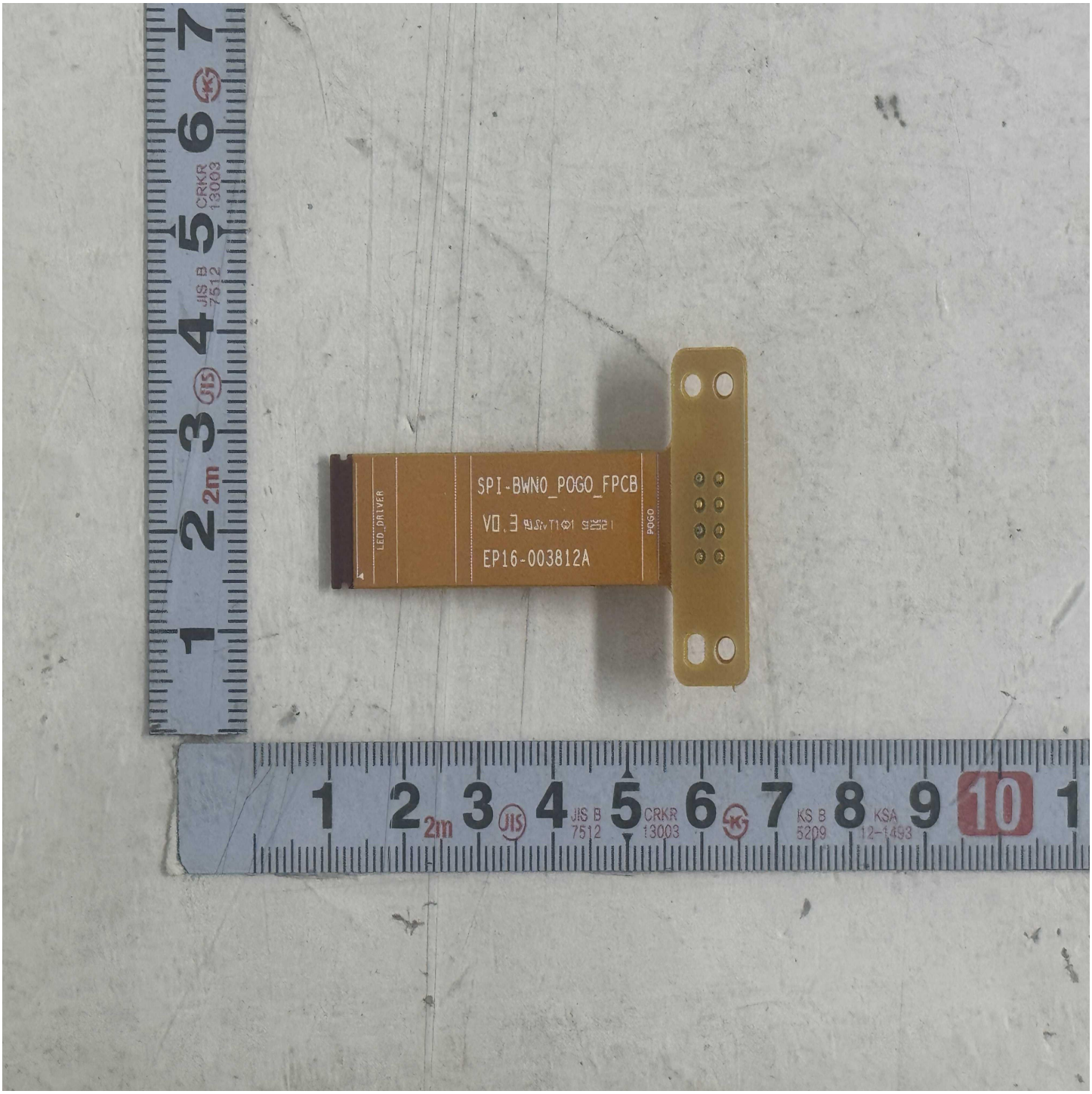

Photographs-14 Page-1

