Network

TNS-7000M

3MP Mono BCR Camera

Key Features

- IP67, IP66, IK10 Rated
- 50fps Max. Framerate
- Modular Structure
- 3MP Image Resolution
- Barcode recognition, WiseBCR based on AI engine
  - 1D Code, 2D Code are available

※ Lenses, LED modules, front cover, Ethernet/Power cables and brackets are sold separately as accessories

Design and specifications are subject to change without notice. The latest product information / specification can be found at HanwhaVision.com
Hanwha Vision is formerly known as Hanwha Techwin.

© Hanwha Vision CO., LTD. All rights reserved.

TNS-7000M

3MP Mono BCR Camera

Specifications

Video

Imaging Device	Size	1/3"
	Type	CMOS
Resolution		2048x1536
Max. Framerate	H.265/H.264	50fps
Pixel Size		2.25㎛

Lens

Optional Lens	6mm/8mm/12mm/16mm/25mm

Operational

Backlight Compensation		HDR
Electronic Shutter	Mode	Minimum, Maximum, Global shutter mode
	Speed Range	33.3ms~150㎲
Video Rotation		Flip, Mirror
Alarm Interface	In/Out	Input 2ea, Output 2ea
Alarm Triggers		Alarm input
Alarm Events When Alarm Trigger Occurred		Trigger On/Off, Read/NoRead
LED Out		Support via optional LED accessories(M12 pin connections), White/Red/Blue option

Analytics

Advanced Analytics		Barcode recognition, WiseBCR based on AI engine
Barcode Type	1D Code	Code128, CODE39, CODE93, Codabar, ITF(Interleaved 2 of 5), UPC, EAN
	2D Code	QRcode, DataMatrix, Maxicode, PDF417

Network

Ethernet	RJ-45(10/100/1000BASE-T), M12
Video Compression	H.265/H.264: Main/High, MJPEG
Bitrate Control	H.265/H.264: CBR or VBR, MJPEG: VBR

Design and specifications are subject to change without notice. The latest product information / specification can be found at HanwhaVision.com
Hanwha Vision is formerly known as Hanwha Techwin.

© Hanwha Vision CO., LTD. All rights reserved.

Network

Streaming	Unicast	Up to 6 users
	Multicast	Support
	Multiple Streaming	Up to 3 profiles
Protocol		IPv4, IPv6, TCP/IP, UDP/IP, RTP(UDP), RTP(TCP), RTCP, RTSP, NTP, HTTP, HTTPS, SSL/TLS, DHCP, FTP, SMTP, ICMP, IGMPv2, SNMPv1/v2c/v3(MIB-2), ARP, DNS, DDNS, QoS, UPnP, Bonjour, SRTP(TCP, UDP Unicast), MQTT
Application Programming Interface	ONVIF	M
	Others	SUNAPI(HTTP API), Hanwha Vision Open Platform

General

Edge Storage	Micro SD/SDHC/SDXC	Max. 256GB x 1slot

Environmental & Electrical

Operating Condition	Temperature	-40°C~+55°C(-40°F~+131°F)
	Humidity	0~95% RH(non-condensing)
	Others	Start up should be done at above -30°C
Storage Condition	Temperature	-40°C~+60°C(-40°F~+140°F)
	Humidity	0~95% RH(non-condensing)
Input Voltage		24VDC
Power Consumption	24VDC	Max 12.9W, Typical 6.7W * Max: LED On Typical: LED Off

Mechanical

Color	White, Black
Material	Aluminum
RAL Code	RAL9003
Product Dimensions	W74.4mm x H77.4mm x D59.4mm
Product Weight	420g
Indicator LED	Support
Status LED	Support

Certifications & Standards

EMC	FCC 47 CFR 15 Subpart B Class A, ICES-3(A)/NMB-3(A), CE/UKCA - EN55032 Class A, EN 50130-4, EN 61000-3-2, EN 61000-3-3, KS C 9832 Class A, KS C 9835
Safety	UL 62368-1, CAN/CSA C22.2 NO. 62368-1
Environment	IEC 60529 IP66, IEC 60529 IP67, IEC 62262 IK10, IEC 60068-2-6, IEC 60068-2-27

Design and specifications are subject to change without notice. The latest product information / specification can be found at HanwhaVision.com
Hanwha Vision is formerly known as Hanwha Techwin.

© Hanwha Vision CO., LTD. All rights reserved.

TNS-7000M

3MP Mono BCR Camera

CAD

Unit: mm [inch]

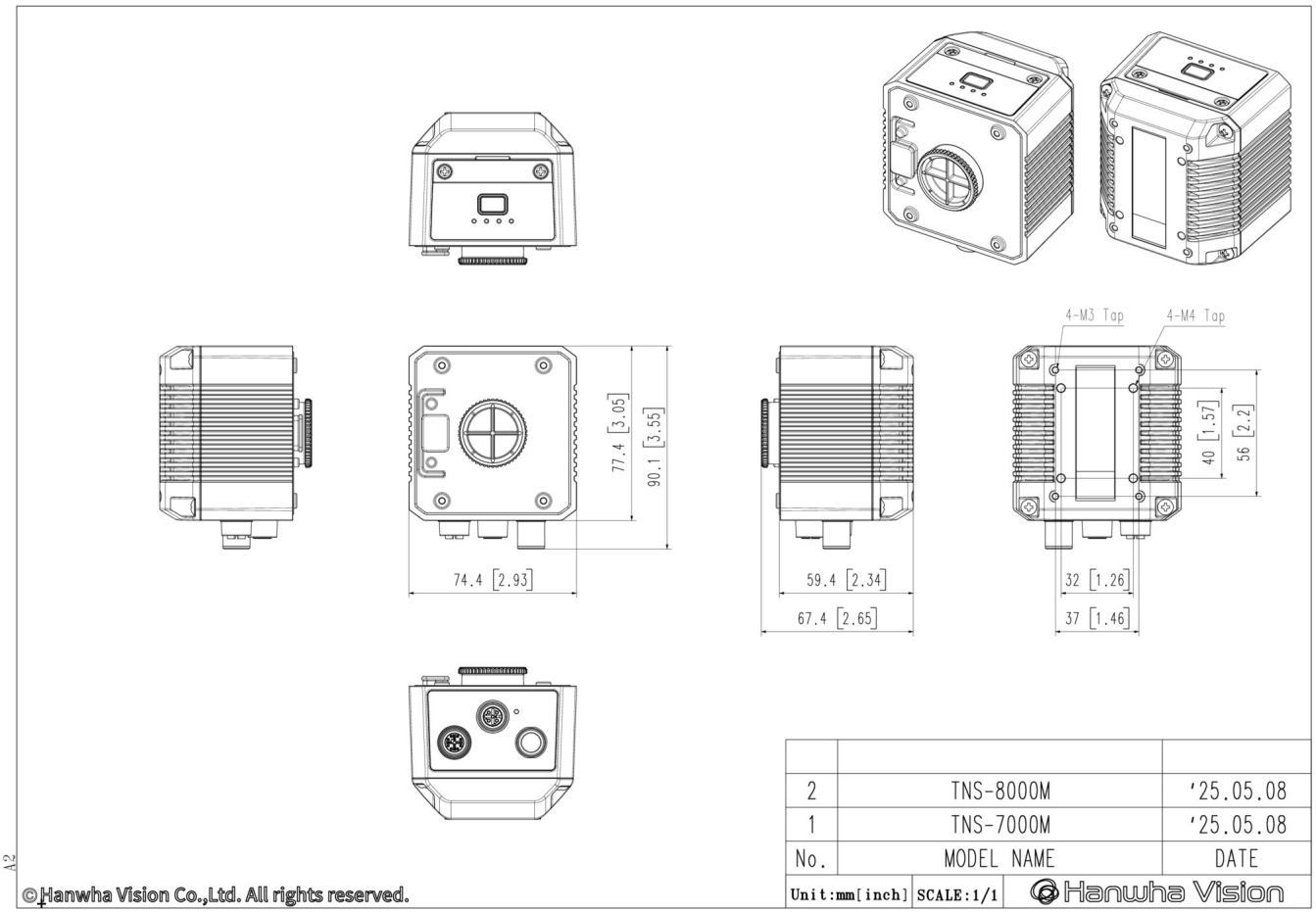

© Hanwha Vision CO., LTD. All rights reserved.

Compatible Devices

SBO-BPM0

SLM-5M06

SLM-5M08

SLM-5M12

SLM-5M16

SLM-5M25

SPF-BCB0

SPF-BDB0

SPF-BPB0

SPI-BWN0

SPI-BWM0

SPI-BWM1

SPI-BWW0

SPI-BBN0

SPI-BBM0

SPI-BBM1

SPI-BBW0

SPI-BRM0

SPI-BRM1

SPI-BRN0

SPI-BRW0

SPP-C08020E

SPP-C08050E

SPP-C08100E

SPP-C12020P

SPP-C12050P

SPP-C12100P

Design and specifications are subject to change without notice. The latest product information / specification can be found at HanwhaVision.com
Hanwha Vision is formerly known as Hanwha Techwin.

© Hanwha Vision CO., LTD. All rights reserved.