

Network

TNV-7011RC

3MP IR Vandal Corner Camera

Key Features

- Anti-ligature design for corrections and behavioral health facilities
- 3 Megapixel (2048 x 1536) resolution
- 30fps @ all resolutions (H.265/H.264/MJPEG)
- Invisible 940nm IR LED
- 0.3 lux @ F2.0 (Color), 0 lux @ F2.0 (B/W)
- Built-in 2.8mm fixed lens
- H.265, H.264, MJPEG triple codec support, Multiple streaming
- Day & Night, WDR (120dB)
- Video & audio analytics, Shock detection
- microSD/SDHC/SDXC memory slot (Maximum. 256GB)
- Hallway view, WiseStream II support
- PoE, DC 12V, IK10+, IP66, IP6K9K
- Built-in mic/audio input support

Design and specifications are subject to change without notice. The latest product information / specification can be found at HanwhaVision.com
Hanwha Vision is formerly known as Hanwha Techwin.

© Hanwha Vision CO., LTD. All rights reserved.

TNV-7011RC

3MP IR Vandal Corner Camera



Specifications

Video

Imaging Device	Size	1/2.8"
	Type	CMOS
Resolution		2048x1536, 1920x1080, 1600x1200, 1280x1024, 1280x960, 1280x720, 1024x768, 800x600, 800x448, 720x576, 720x480, 640x480, 640x360, 320x240
Max. Framerate	H.265/H.264	30fps
	MJPEG	30fps
Min. Illumination (Lux)	Color(1/30sec, 30IRE)	0.3
	BW(1/30sec, 30IRE)	0.03
Video Out		CVBS: 1.0 Vp-p / 75Ω composite for installation

Lens

Focal Length (mm)		2.8
Max Aperture Ratio (F number)	Wide	2.0
Angular Field of View	Horizontal	102°
	Vertical	75°
	Diagonal	129°
Min. Object Distance		0.4m(1.31ft)
Focus Control		Manual

Pan / Tilt / Rotate

Pan / Tilt / Rotate Range	Tilt	30°~60°

Operational

Day & Night	Auto(ICR)
Backlight Compensation	BLC, HLC, WDR, SSDR
Wide Dynamic Range (dB)	120
Digital Noise Reduction	SSNR V
Digital Image Stabilization	Support
Defog	Support

Design and specifications are subject to change without notice. The latest product information / specification can be found at HanwhaVision.com
Hanwha Vision is formerly known as Hanwha Techwin.

© Hanwha Vision CO., LTD. All rights reserved.

Operational

Motion Detection	Quantity	8ea
	Shape	8point Polygonal zones
Privacy Masking	Quantity	32ea
	Shape	Polygonal zones
	Color / Option	Gray, Green, Red, Blue, Black, White, Mosaic
Gain Control		Low, Middle, High
White Balance		ATW, AWC, Manual, Indoor, Outdoor
LDC		Support
Electronic Shutter	Mode	Minimum, Maximum, Anti flicker
	Speed Range	2~1/12,000sec
Video Rotation		Flip, Mirror, Hallway view(90°/270°)
Alarm Interface	In/Out	Input 1ea, Output 1ea
Alarm Triggers		Analytics, Network disconnect, Alarm input
Alarm Events When Alarm Trigger Occurred		File upload(image): e-mail/FTP, Notification: e-mail, Recording: SD/SDHC/SDXC or NAS recording at event triggers,Alarm output, Handover: PTZ preset
Audio In		Selectable(mic in/line in), Built-in mic
Audio Out		Line out
Light Type		IR LED
Light Viewable Length	IR	10m(32.8ft)
IR Wavelength		940nm

Analytics

Analytics Events	Normal	Defocus detection, Motion detection, Tampering, Fog detection, Face detection, Audio detection, Sound classification, Shock detection, Virtual area(Lotering, Intrusion, Enter/Exit, Appear/Disappear), Virtual line(Crossing, Direction)

Network

Ethernet		RJ-45(10/100BASE-T)
Video Compression		H.265/H.264: Main/Baseline/High, MJPEG
Audio Compression		G.711 u-law /G.726 selectable,G.726(ADPCM) 8kHz,G.711 8kHz, G.726: 16kbps,24kbps,32kbps,40kbps, AAC-LC: 48kbps at 16kHz
Smart Codec		Manual, WiseStream II
Bitrate Control		H.265/H.264: CBR or VBR, MJPEG: VBR
Streaming	Unicast	Up to 20 users
	Multicast	Support
	Multiple Streaming	Up to 10 profiles

© Hanwha Vision CO., LTD. All rights reserved.

Network

Protocol		IPv4, IPv6, TCP/IP, UDP/IP, RTP(UDP), RTP(TCP), RTCP, RTSP, NTP, HTTP, HTTPS, SSL/TLS, DHCP, FTP, SMTP, ICMP, IGMPv2, SNMPv1/v2c/v3(MIB-2), ARP, DNS, DDNS, QoS, UPnP, Bonjour, SRTP(TCP, UDP Unicast), PPPoE, PIM-SM
Application Programming Interface	ONVIF	S, G, T
	Others	SUNAPI(HTTP API), Hanwha Vision Open Platform
Direct Cloud Connection		Optional (needs gateway)

Security

User authentication	Digest authentication
Network authentication	IEEE 802.1X(EAP-TLS, EAP-LEAP)
Secure Communication	HTTPS, SRTP
Access Control	IP-based access control
Audit	Access / System / Event Log management

General

Edge Storage	Micro SD/SDHC/SDXC	Max. 256GB x 1slot

Environmental & Electrical

Operating Condition	Temperature	-10°C~+55°C(+14°F~+131°F)
	Humidity	0~90% RH(non-condensing)
Storage Condition	Temperature	-50°C~+60°C(-58°F~+140°F)
	Humidity	0~90% RH(non-condensing)
Input Voltage		PoE(IEEE802.3af, Class2), 12VDC
Power Consumption	PoE	Max 12W, typical 10.1W
	12VDC	Max 11W, typical 8.6W

Mechanical

Color	White
Material	Aluminum
RAL Code	RAL9003
Product Dimensions	274.5(W)x258.5(H)x113.5(D)mm(10.81x10.18x4.5")
Product Weight	2.1kg(4.63lb)

Certifications & Standards

Environment	IEC 60529 IP66, ISO 20653 IP6K9K, IEC 62262 IK10+

DORI (EN62676-4 standard)

Detect (25PPM/ 8PPF)	Wide	33.2m(108.82ft)
Observe (63PPM/ 19PPF)	Wide	13.3m(43.53ft)
Recognize (125PPM/ 38PPF)	Wide	6.6m(21.76ft)

Design and specifications are subject to change without notice. The latest product information / specification can be found at HanwhaVision.com
Hanwha Vision is formerly known as Hanwha Techwin.

© Hanwha Vision CO., LTD. All rights reserved.

DORI (EN62676-4 standard)

Identify (250PPM/ 76PPF)	Wide	3.3m(10.88ft)

Design and specifications are subject to change without notice. The latest product information / specification can be found at HanwhaVision.com
Hanwha Vision is formerly known as Hanwha Techwin.

© Hanwha Vision CO., LTD. All rights reserved.

TNV-7011RC

3MP IR Vandal Corner Camera



CAD

Unit: mm [inch]

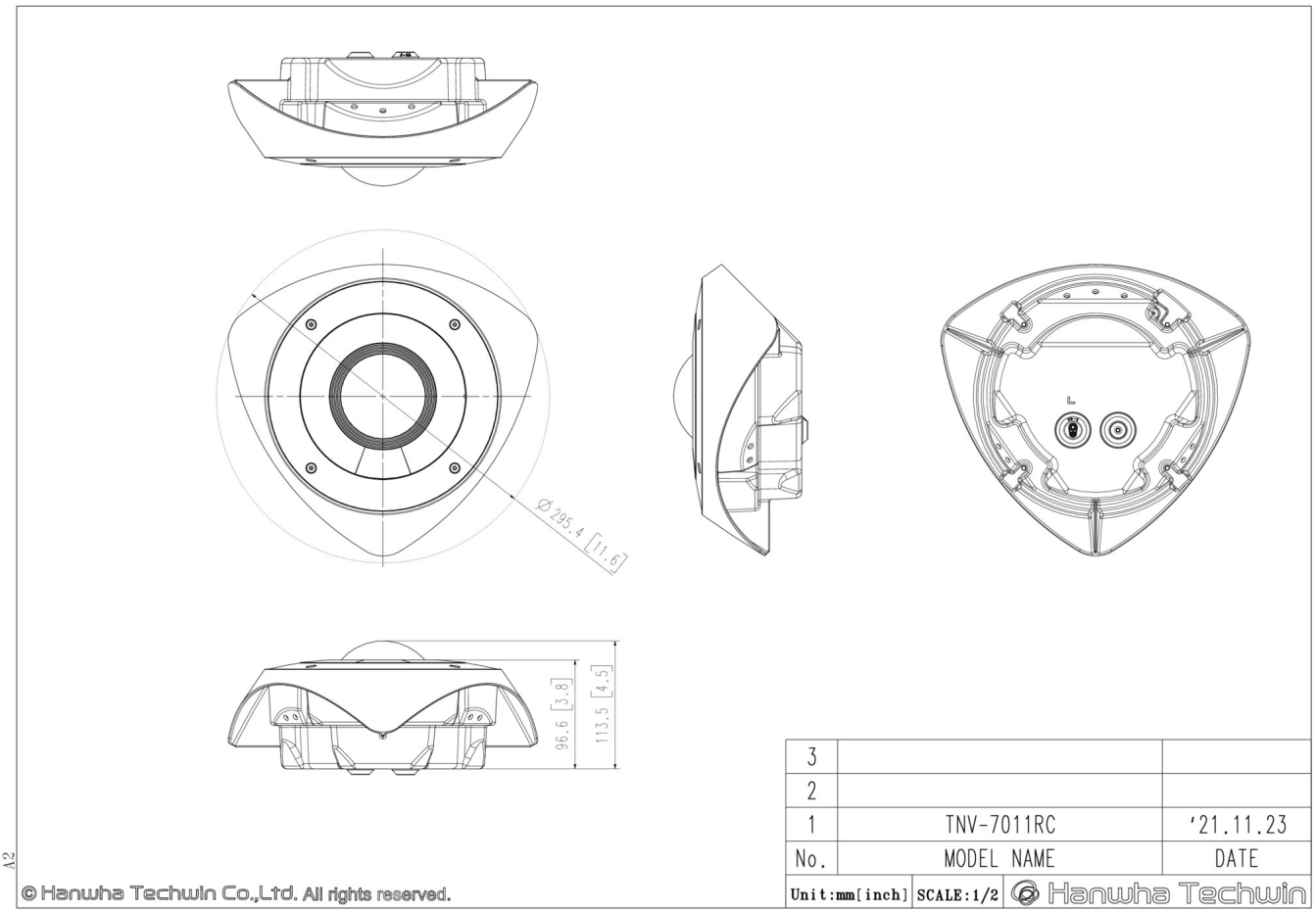

Design and specifications are subject to change without notice. The latest product information / specification can be found at HanwhaVision.com
Hanwha Vision is formerly known as Hanwha Techwin.

© Hanwha Vision CO., LTD. All rights reserved.