

Network Dome

# TNV-C8014RM

T AI 5MP IR Mobile Camera

## Key Features

- Max. 5MP resolution
- 3.0 mm fixed lens
- Color: 0.03Lux(F1.6, 1/30sec), BW: 0.003Lux(F1.6, 1/30sec, 30IRE)
- Maximum 30fps@5MP (H.265/H.264)
- IR viewable length 30m (98.42ft)
- Hard-coated dome bubble,
- EIS, Shock detection, Heater, Built-in Mic
- H.265, H.264, MJPEG, WiseStreamIII (Using AI engine)
- Analytics events based on AI engine (NPU)
- EN50155 compliance
- IP66, IK10
- PoE: Max 7.2W, M12 connector

Design and specifications are subject to change without notice. The latest product information / specification can be found at HanwhaVision.com
Hanwha Vision is formerly known as Hanwha Techwin.

© Hanwha Vision CO., LTD. All rights reserved.

# TNV-C8014RM

T AI 5MP IR Mobile Camera



## Specifications

### Video

| | | |
|---|---|---|
| **Imaging Device** | Size | 1/2.8" |
| | Type | CMOS |
| **Resolution** | | 2592x1944, 2560x1440, 1920x1080, 1280x960, 1280x720, 800x600, 800x448, 720x576, 720x480, 640x480, 640x360, 320x240 |
| **Max. Framerate** | H.265/H.264 | 30fps/25fps(60Hz/50Hz) |
| | MJPEG | 30fps(@5MP Max. 5fps) |
| **Min. Illumination (Lux)** | Color(1/30sec, 30IRE) | 0.03 |
| | BW(1/30sec, 30IRE) | 0.003 |
| **Video Out** | | USB: Micro USB Type B. Preview and installation ONLY. Requires WiFi dongle. |

### Lens

| | | |
|---|---|---|
| **Focal Length (mm)** | | 3.0 |
| **Max Aperture Ratio (F number)** | Wide | 1.6 |
| **Angular Field of View** | Horizontal | 100° |
| | Vertical | 73° |
| | Diagonal | 129° |
| **Min. Object Distance** | | 0.5m(1.64ft) |
| **Focus Control** | | Fixed |
| **Lens Type** | | Fixed iris |
| **Mount Type** | | M12 |

### Pan / Tilt / Rotate

| | | |
|---|---|---|
| **Pan / Tilt / Rotate Range** | Pan | ±5° |
| | Tilt | 0°~67° |
| | Rotate | ±90° |

### Operational

| | |
|---|---|
| **Day & Night** | Auto(ICR) |
| **Backlight Compensation** | BLC, WDR, SSDR, ClearHDR |
| **Wide Dynamic Range (dB)** | 120 |

Design and specifications are subject to change without notice. The latest product information / specification can be found at HanwhaVision.com
Hanwha Vision is formerly known as Hanwha Techwin.

© Hanwha Vision CO., LTD. All rights reserved.

## Operational

| | | |
|---|---|---|
| **Digital Noise Reduction** | | WiseNR II (Based on AI engine), SSNR V |
| **Motion Detection** | Quantity | 8ea |
| | Shape | 8point Polygonal zones |
| **Privacy Masking** | Quantity | 32ea |
| | Shape | 4point Quadrangle zones |
| | Color / Option | Gray, Green, Red, Blue, Black, White |
| **Gain Control** | | Low, Middle, High |
| **White Balance** | | ATW, AWC, Manual, Indoor, Outdoor |
| **LDC** | | Support |
| **Electronic Shutter** | Mode | Minimum, Maximum, Anti flicker, Prefer shutter control(Based on AI engine) |
| | Speed Range | 1/5~1/25,000sec |
| **Video Rotation** | | Flip, Mirror, Hallway view(90°/270°) |
| **Alarm Triggers** | | Analytics, Network disconnect, MQTT subscription |
| **Alarm Events When Alarm Trigger Occurred** | | File upload(image): e-mail/FTP/SFTP,<br>Notification: e-mail,<br>Recording: SD/SDHC/SDXC or NAS recording at event triggers,<br>Handover: PTZ preset,send message by HTTP/HTTPS/TCP,Audio clip playback,<br>MQTT: publication |
| **Audio In** | | Selectable(mic in/line in), Built-in mic |
| **Audio Out** | | Line out |
| **Light Type** | | IR LED |
| **Light Viewable Length** | IR | 30m(98.42ft) |
| **IR Wavelength** | | 850nm |

## Analytics

| | | |
|---|---|---|
| **Classified Object Type** | | Person, Vehicle |
| **Attributes** | Person | Upper/Lower clothes color |
| | Vehicle | Type(car, bus, truck, motorcycle, bicycle), Color |
| **Thumbnail** | | BestShot |
| **Analytics Events** | Based on AI Engine | Object detection, Virtual line(Crossing/Direction), Virtual area(Loitering/Intrusion/Enter/Exit), Motion detection |
| | Normal | Defocus detection, Tampering, Shock detection, Virtual area(Appear/Disappear) |
| **Business Intelligence** | Based on AI Engine | People counting, Queue management, Heatmap, Vehicle counting |

## Network

| | |
|---|---|
| **Ethernet** | M12 |
| **Video Compression** | H.265: Main,<br>H.264: Main/High,MJPEG |
| **Audio Compression** | G.711 u-law /G.726 selectable,G.726(ADPCM) 8kHz,G.711 8kHz,<br>G.726: 16kbps,24kbps,32kbps,40kbps,<br>AAC-LC: 48kbps at 16kHz |

Design and specifications are subject to change without notice. The latest product information / specification can be found at HanwhaVision.com
Hanwha Vision is formerly known as Hanwha Techwin.

© Hanwha Vision CO., LTD. All rights reserved.

## Network

| | | |
|---|---|---|
| **Smart Codec** | | Manual, WiseStreamIII |
| **Bitrate Control** | | H.265/H.264: CBR or VBR,<br>MJPEG: VBR |
| **Streaming** | Unicast | Up to 20 users |
| | Multicast | Support |
| | Multiple Streaming | Up to 5 profiles |
| **Protocol** | | IPv4, IPv6, TCP/IP, UDP/IP, RTP(UDP), RTP(TCP), RTCP, RTSP, NTP, HTTP, HTTPS, SSL/TLS, DHCP, FTP, SFTP, SMTP, ICMP, IGMPv2, SNMPv1/v2c/v3(MIB-2), ARP, DNS, DDNS, QoS, UPnP, Bonjour, LLDP, CDP, SRTP(TCP, UDP Unicast), MQTT |
| **Application Programming Interface** | ONVIF | S, G, T, M |
| | Others | SUNAPI(HTTP API), Hanwha Vision Open Platform |
| **Direct Cloud Connection** | | Support |

## Security

| | |
|---|---|
| **OS / Firmware Protect** | Encrypted firmware, Secure boot, Signed firmware |
| **User authentication** | Digest authentication, Prevent brute-force attack |
| **Network authentication** | IEEE 802.1X(EAP-TLS, EAP-LEAP, EAP-PEAP, MSCHAPv2) |
| **Secure Communication** | HTTPS, WSS(WebSocket Secure) |
| **Access Control** | IP-based access control |
| **Data Protect** | Encryption credentials, Encrypt compress for live recording file export |
| **Audit** | Access / System / Event Log management |
| **Device ID** | Device certificate(Hanwha Vision Root CA) |
| **Secure Storage** | SDcard partition encrypt(AES-256) |

## General

| | | |
|---|---|---|
| **Memory** | RAM | 2GB |
| | Flash | 1GB |
| **Edge Storage** | Micro SD/SDHC/SDXC | Max. 256GB x 1slot |

## Environmental & Electrical

| | | |
|---|---|---|
| **Operating Condition** | Temperature | -40°C~+55°C(-40°F~+131°F) |
| | Humidity | 0~100% RH(condensing) |
| | Others | Start up should be done at above -30°C, Humidity control with AIR vent |
| **Storage Condition** | Temperature | -40°C~+55°C(-40°F~+131°F) |
| | Humidity | 0~95% RH(non-condensing) |
| **Input Voltage** | | PoE(IEEE802.3af, Class3) |
| **Power Consumption** | PoE | Max. 7.2W, typical 4.2W |

## Mechanical

| | |
|---|---|
| **Color** | White |

Design and specifications are subject to change without notice. The latest product information / specification can be found at HanwhaVision.com
Hanwha Vision is formerly known as Hanwha Techwin.

© Hanwha Vision CO., LTD. All rights reserved.

## Mechanical

| | |
|---|---|
| **Material** | Aluminum, Hard-coated dome |
| **RAL Code** | RAL9003 |
| **Product Dimensions** | 106x105x55mm(4.17x.4.13x2.17") |
| **Product Weight** | 466g(1.03 lb) |

## Certifications & Standards

| | |
|---|---|
| **EMC** | EN 50121-4, FCC 47 CFR 15 Subpart B Class A, ICES-3(A)/NMB-3(A), CE/UKCA - EN55032 Class A, EN 50130-4, EN 61000-3-2, EN 61000-3-3, VCCI CISPR 32 Class A, RCM AS-NZS CISPR 32 Class A, EN 50121-3-2 |
| **Safety** | UL 62368-1, CAN/CSA C22.2 NO. 62368-1, IEC 62471 |
| **Environment** | IEC/EN 63000, IEC 60529 IP66, IEC 62262 IK10, EN 50155, IEC 62236-4, EN 50121-4, JIS E 4031, EN 50498, IEC/EN 61373, EN 45545, JIS E 5006, IEC 62236-3-2 |

## DORI (EN62676-4 standard)

| | | |
|---|---|---|
| **Detect (25PPM/ 8PPF)** | Wide | 43.5m(142.71ft) |
| **Observe (63PPM/ 19PPF)** | Wide | 17.5m(57.09ft) |
| **Recognize (125PPM/ 38PPF)** | Wide | 8.7m(28.54ft) |
| **Identify (250PPM/ 76PPF)** | Wide | 4.3m(14.27ft) |

Design and specifications are subject to change without notice. The latest product information / specification can be found at HanwhaVision.com
Hanwha Vision is formerly known as Hanwha Techwin.

© Hanwha Vision CO., LTD. All rights reserved.

# TNV-C8014RM

T AI 5MP IR Mobile Camera



## CAD

**Unit:** mm [inch]

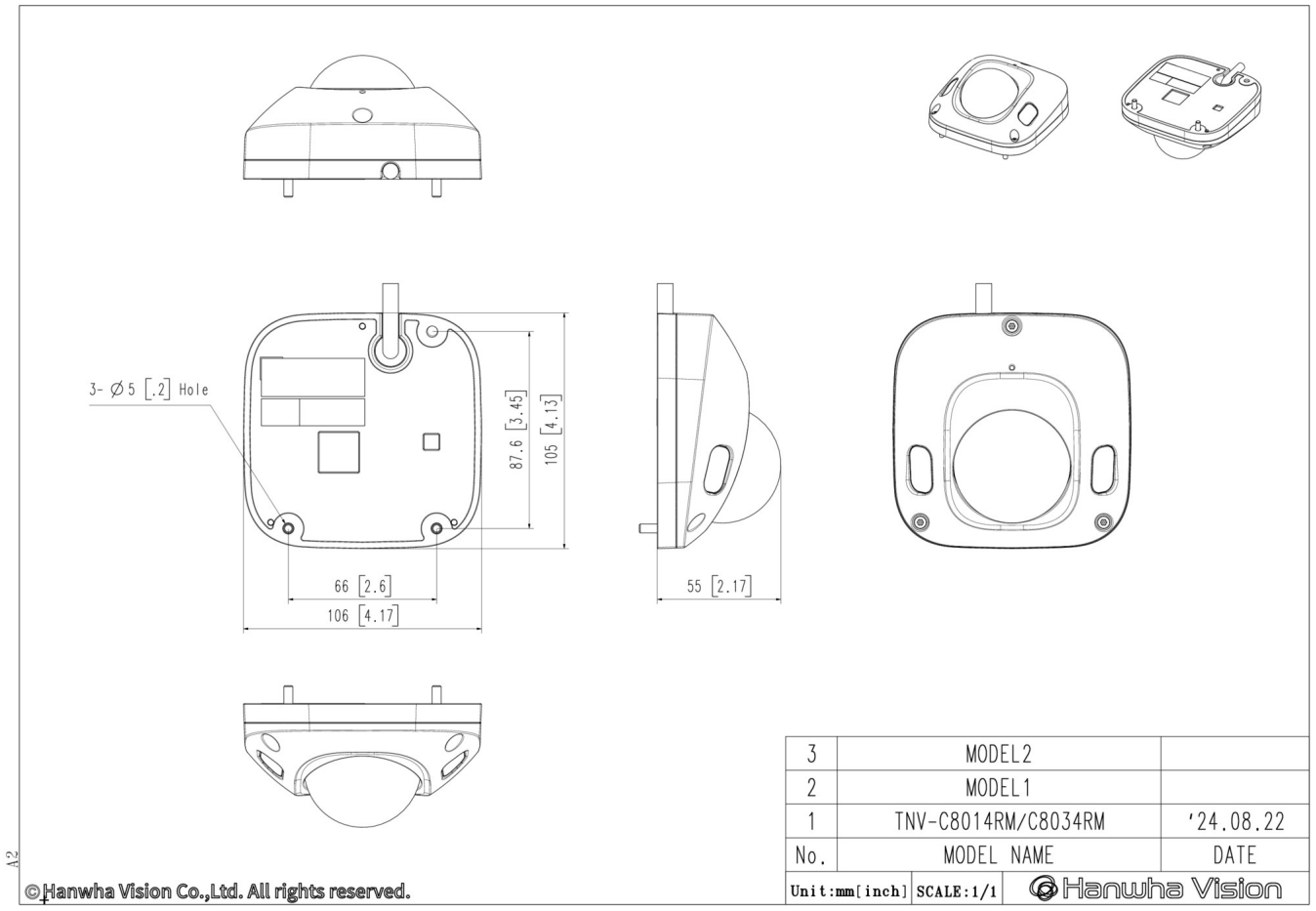




© Hanwha Vision CO., LTD. All rights reserved.