Network

XNB-A8004B

AI 1-Ch Remote-head Camera

Key Features

- 5MP Image Resolution
- 1CH Supported Ch
- Hallway Rotation
- Shock Detection
- Micro SD Card Slot
- Audio In/Out
- DC 12V Power
- Legacy Analog Support: CVBS Video Output included
- Compatible Lenses: SLA-F1080FA, SLA-F2480A, SLA-F2480VA, SLA-F4780A, SLA-F4780V
  *The lens module is sold separately

Design and specifications are subject to change without notice. The latest product information / specification can be found at HanwhaVision.com
Hanwha Vision is formerly known as Hanwha Techwin.

© Hanwha Vision CO., LTD. All rights reserved.

XNB-A8004B

AI 1-Ch Remote-head Camera

Specifications

Video

Resolution		2560x1920, 2560x1440, 1920x1080, 1600x1200, 1280x960, 1280x720, 1024x768, 800x600, 640x480, 640x360, 320x240, 320x180
Max. Framerate	H.265/H.264	30fps/25fps(60Hz/50Hz)
	MJPEG	30fps(@5MP Max. 5fps)
Video Out		CVBS: 1.0 Vp-p / 75Ω composite for installation, USB: USB Type C. Preview and installation ONLY. Requires WiFi dongle.

Lens

Optional Lens		SLA-T1080FA, SLA-T2480A, SLA-T4680A, SLA-T2480VA, SLA-T4680VA, SLA-T2480BA, SLA-T2880BA, SLA-T4680DA, SLA-T4680DSA, SLA-T2480WA, SLA-T2480WDA, SLA-F1080FA, SLA-F2480A, SLA-F4780A, SLA-F2480VA, SLA-F4780VA, SLA-F2480BA, SLA-F2480DA, SLA-F2480DSA, SLA-F2480WA, SLA-F2480WDA, SLA-F2480HA, SLA-T2480HA

Operational

Day & Night		Auto(Electrical)
Backlight Compensation		BLC, HLC, WDR, SSDR
Wide Dynamic Range (dB)		120
Digital Noise Reduction		WiseNR II (Based on AI engine), SSNR V
Digital Image Stabilization		Support
Defog		Support
Motion Detection	Quantity	8ea
	Shape	8point Polygonal zones
Privacy Masking	Quantity	32ea
	Shape	8point Polygonal zones
	Color / Option	Gray, Green, Red, Blue, Black, White, Mosaic, Purple, Yellow
	Dynamic Privacy Masking: Color / Option	Gray, Green, Red, Blue, Black, White, Mosaic, Purple, Yellow
Gain Control		Off, Max gain, Manual
White Balance		ATW, NarrowATW, AWC, Manual, Indoor, Outdoor
LDC		Support(Not support for fisheye lens)
Electronic Shutter	Mode	Minimum, Maximum, Anti flicker, Prefer shutter control(Based on AI engine)
	Speed Range	2~1/30,000sec

Design and specifications are subject to change without notice. The latest product information / specification can be found at HanwhaVision.com
Hanwha Vision is formerly known as Hanwha Techwin.

© Hanwha Vision CO., LTD. All rights reserved.

Operational

Video Rotation		Flip, Mirror, Hallway view(90°/270°)
Alarm Interface	In/Out	2 configurable I/O ports
	Others	Support extra alarm I/O via optional I/O box
Alarm Triggers		Analytics, Network disconnect, Alarm input, Time schedule, MQTT subscription, Day/Night, Storage disruption
Alarm Events When Alarm Trigger Occurred		File upload(image): e-mail/FTP/SFTP, File upload(video clip): FTP/SFTP, Notification: e-mail, Recording: SD/SDHC/SDXC or NAS recording at event triggers,Alarm output, Handover: PTZ preset,send message by HTTP/HTTPS/TCP,Audio clip playback, MQTT: publication
Audio In		Selectable(mic in/line in)
Audio Out		Line out

Analytics

Classified Object Type		Person, Face, Vehicle, License plate
Attributes	Person	Upper/Lower clothes color, Gender, Bag
	Vehicle	Type(car, bus, truck, motorcycle, bicycle), Color
	Face	Age, Gender, Face mask, Glasses
Thumbnail		BestShot
Analytics Events	Based on AI Engine	Object detection, Virtual line(Crossing/Direction), Motion detection, Face mask detection, Social distancing detection, Slip & fall detection, Virtual area(Loitering/Intrusion/Enter/Exit/Appear/Disappear), Tailgating detection
	Normal	Defocus detection, Tampering, Audio detection, Shock detection
Business Intelligence	Based on AI Engine	People counting, Queue management, Heatmap, Vehicle counting, Crowd counting

Network

Ethernet		Metal shielded RJ-45(10/100BASE-T)
Video Compression		H.265/H.264: Main/Baseline/High, MJPEG
Audio Compression		G.711(PCM): 8kHz(64kbps), G.726(ADPCM): 8kHz(16/24/32/40kbps), AAC-LC: 16kHz(48kbps), OPUS: 48kHz(64kbps)
Smart Codec		WiseStream(Based on AI engine)
Bitrate Control		H.265/H.264: CBR or VBR, MJPEG: VBR
Streaming	Unicast	Up to 20 users
	Multicast	Support
	Multiple Streaming	Up to 5 profiles, 3 virtual channel support
Protocol		IPv4, IPv6, TCP/IP, UDP/IP, RTP(UDP), RTP(TCP), RTCP, RTSP, NTP, HTTP, HTTPS, SSL/TLS, DHCP, FTP, SFTP, ICMP, IGMPv2, SNMPv1/v2c/v3(MIB-2), ARP, DNS, DDNS, QoS, UPnP, Bonjour, LLDP, CDP, SRTP(TCP, UDP Unicast), MQTT, SMTP(StartTLS), Syslog
Application Programming Interface	ONVIF	S, G, T, M
	Others	SUNAPI(HTTP API), Hanwha Vision Open Platform

Design and specifications are subject to change without notice. The latest product information / specification can be found at HanwhaVision.com
Hanwha Vision is formerly known as Hanwha Techwin.

© Hanwha Vision CO., LTD. All rights reserved.

Network

Direct Cloud Connection	Support

Security

OS / Firmware Protect	Encrypted firmware, Secure boot, Signed firmware
User authentication	Digest authentication, Prevent brute-force attack
Network authentication	IEEE 802.1X(EAP-TLS, EAP-LEAP, EAP-PEAP, MSCHAPv2)
Secure Communication	HTTPS, WSS(WebSocket Secure), SRTP
Access Control	IP-based access control, MAC-based access control, Auto logout
Data Protect	Encryption credentials, Encrypt compress for live recording file export
Audit	Access / System / Event Log management
Device ID	Device certificate(Hanwha Vision Root CA)
Secure Storage	SDcard partition encrypt(AES-256), Secure element
Supply Chain Security	SBOM
Security Certificate	Secure element(FIPS 140-3 level3, CC EAL6+), Consumer IoT Security Standard (ETSI EN 303 645), Security Built-in Process Certification (IEC 62443-4-1)

General

SoC	Type	Wisenet 9
	Dual NPU	Support
Memory	RAM	4GB
	Flash	8GB eMMC
Edge Storage	Micro SD/SDHC/SDXC	Max. 1TB x 1slot
Edge Storage(OnCloud)	Micro SD/SDHC/SDXC	Max. 1TB x 1slot *Hanwha Vision branded microSD cards have been certified and recommended for OnCloud edge recording.

Environmental & Electrical

Operating Condition	Temperature	-10°C~+50°C(+14°F~+122°F)
	Humidity	0~95% RH(non-condensing)
Storage Condition	Temperature	-50°C~+60°C(-58°F~+140°F)
	Humidity	0~90% RH(non-condensing)
Input Voltage		PoE(IEEE802.3af, Class3), 12VDC
Power Consumption	PoE	Max. 10.6W, typical 9.3W
	12VDC	Max. 10.5W, typical 9.0W
WisePower		Power monitoring
Power Redundance Failover		Support

Mechanical

Color	Black
Material	Aluminum, PC(Polycarbonate)

Design and specifications are subject to change without notice. The latest product information / specification can be found at HanwhaVision.com
Hanwha Vision is formerly known as Hanwha Techwin.

© Hanwha Vision CO., LTD. All rights reserved.

Mechanical

Material Management	Declaration	RoHS(EU RoHS directive 2011/65/EU and IEC/EN 63000:2018), REACH(Regulation (EC) No. 1907/2006), Conflict mineral policy(Section 1502 of US Dodd Frank Act)
RAL Code		RAL9005
Product Dimensions		131.1(W)x33.5(H)x86(D)mm(5.16x1.32x3.39")
Product Weight		467g(1.03lb)

Certifications & Standards

EMC	FCC 47 CFR 15 Subpart B Class A, ICES-3(A)/NMB-3(A), CE/UKCA - EN55032 Class A, EN 50130-4, EN 61000-3-2, EN 61000-3-3, VCCI CISPR 32 Class A, RCM AS-NZS CISPR 32 Class A, KS C 9832 Class A, KS C 9835
Safety	UL 62368-1, CAN/CSA C22.2 NO. 62368-1
Environment	IEC/EN 63000, IEC 60529 IP3X, IEC 60068-2-1, IEC 60068-2-2, IEC 60068-2-6, IEC 60068-2-14, IEC 60068-2-27, IEC 60068-2-78

Design and specifications are subject to change without notice. The latest product information / specification can be found at HanwhaVision.com
Hanwha Vision is formerly known as Hanwha Techwin.

© Hanwha Vision CO., LTD. All rights reserved.

Compatible lenses

Video		SLA-T1080VA	SLA-T2480VA	SLA-T2480VA	SLA-T4680VA	SLA-T4680VA	SLA-T4680VA	SLA-T4680VA	SLA-T2880VA	SLA-T1080VA	SLA-T2480VA	SLA-T2480VA	SLA-T2480VA	SLA-T2480VA	SLA-T2480VA	SLA-T2480VA	SLA-T2480VA	SLA-T2480VA	SLA-T2480VA	SLA-T2480VA	SLA-T7680VA	SLA-T4780VA
Imaging Device	Size	1/2.8"	1/2.8"	1/2.8"	1/2.8"	1/2.8"	1/2.8"	1/2.8"	1/2.8"	1/2.8"	1/2.8"	1/2.8"	1/2.8"	1/2.8"	1/2.8"	1/2.8"	1/2.8"	1/2.8"	1/2.8"	1/2.8"	1/2.8"	1/2.8"
	Type	CMOS	CMOS	CMOS	CMOS	CMOS	CMOS	CMOS	CMOS	CMOS	CMOS	CMOS	CMOS	CMOS	CMOS	CMOS	CMOS	CMOS	CMOS	CMOS	CMOS	CMOS
Min. Illumination (Lux)	Color(1/30sec, 30IRE)	0.03	0.045	0.045	0.06	0.06	0.06	0.06	0.045	0.05	0.08	0.08	0.08	0.08	0.08	0.08	0.1	0.08	0.09	0.09
	BW(1/30sec, 30IRE)	0.03	0.045	0.045	0.06	0.06	0.06	0.06	0.045	0.05	0.08	0.08	0.08	0.08	0.08	0.08	0.1	0.08	0.09	0.09

Lens																					
Focal Length (mm)		1.6	2.4	2.4	4.6	4.6	4.6	4.6	2.8	1.6	2.45	2.45	2.45	2.45	2.45	2.45	2.4	2.45	4.72	4.72
Max. Aperture Ratio (F number)	Wide	1.6	2.0	2.0	2.5	2.5	2.5	2.5	2.0	1.6	2.0	2.0	2.0	2.0	2.0	2.0	2.4	2.0	2.07	2.07
	Tele	1.6	2.0		2.5	2.5	2.5	2.5	2.0	1.6	2.0	2.0	2.0	2.0	2.0	2.0	2.4	2.0	2.07	2.07
Angular Field of View	Horizontal	187°	138°	138°	73°	73°	73°	73°	108°	180°	122°	123°	123°	123°	123°	122°	128°	123°	70°	70°
	Vertical	113.9°	73°	73°	39°	39°	39°	39°	63°	145°	90°	91°	91°	91°	91°	90°	92°	91°	50°	50°
	Diagonal		165°	165°	85°	85°	85°	85°	122°	180°	158°	159°	159°	159°	159°	158°	172°	159°	96°	96°
Min. Object Distance							0.3 m (0.98 ft)			0.5 m (1.64 ft)										
Mount Type		RJ12 connected with main unit	RJ12 connected with main unit	RJ12 connected with main unit	RJ12 connected with main unit	RJ12 connected with main unit	RJ12 connected with main unit	RJ12 connected with main unit	RJ12 connected with main unit	RJ12 connected with main unit	RJ12 connected with main unit	RJ12 connected with main unit	RJ12 connected with main unit	RJ12 connected with main unit	RJ12 connected with main unit	RJ12 connected with main unit	RJ12 connected with main unit	RJ12 connected with main unit	RJ12 connected with main unit	RJ12 connected with main unit

Design and specifications are subject to change without notice. The latest product information / specification can be found at HanwhaVision.com
Hanwha Vision is formerly known as Hanwha Techwin.

© Hanwha Vision CO., LTD. All rights reserved.

Lens

Focus Control		Fixed	Fixed	Fixed	Fixed	Fixed	Fixed	Fixed	Fixed	Fixed	Fixed	Fixed	Fixed	Fixed	Fixed	Fixed	Fixed	Fixed	Fixed	Fixed

Pan / Tilt / Rotate

Pan / Tilt / Rotate Range	Pan						Flexible panning ±30°	Flexible panning ±30°				Flexible panning ±30°	Flexible panning ±30°	Flexible panning ±30°	Flexible panning ±30°			0°~350°		
	Tilt																	0°~70°		
	Rotate																	0°~355°		

Design and specifications are subject to change without notice. The latest product information / specification can be found at HanwhaVision.com
Hanwha Vision is formerly known as Hanwha Techwin.

© Hanwha Vision CO., LTD. All rights reserved.

Environmental & Electrical

Operating Condition	Temperature	-10°C ~ +55°C (+14°F ~ +131°F)	-10°C ~ +55°C (+14°F ~ +131°F)		-10°C ~ +55°C (+14°F ~ +131°F)	-10°C ~ +55°C (+14°F ~ +131°F)	-10°C ~ +55°C (+14°F ~ +131°F)	-10°C ~ +55°C (+14°F ~ +131°F)	-10°C ~ +55°C (+14°F ~ +131°F)	-10°C ~ +55°C (+14°F ~ +131°F)	-10°C ~ +55°C (+14°F ~ +131°F)	-10°C ~ +55°C (+14°F ~ +131°F)	-10°C ~ +55°C (+14°F ~ +131°F)	-10°C ~ +55°C (+14°F ~ +131°F)	-10°C ~ +55°C (+14°F ~ +131°F)	-10°C ~ +55°C (+14°F ~ +131°F)	-30°C~ +55°C (-22°F~ +131°F)	-30°C~ +55°C (-22°F~ +131°F)	-10°C ~ +55°C (+14°F ~ +131°F)	-10°C ~ +55°C (+14°F ~ +131°F)
	Humidity	Less than 90% RH	Less than 90% RH		Less than 90% RH	Less than 90% RH	Less than 90% RH	Less than 90% RH	Less than 90% RH	0~95% RH	0~95% RH	0~95% RH	0~95% RH	0~95% RH	0~95% RH	0~95% RH	0~95% RH	0~95% RH	0~95% RH	0~95% RH
	Others																	Start up should be done at above -30°C		
Storage Condition	Temperature	-50°C~ +60°C (-58°F~ +140°F)	-50°C~ +60°C (-58°F~ +140°F)		-50°C~ +60°C (-58°F~ +140°F)	-50°C~ +60°C (-58°F~ +140°F)	-50°C~ +60°C (-58°F~ +140°F)	-50°C~ +60°C (-58°F~ +140°F)	-50°C~ +60°C (-58°F~ +140°F)	-50°C~ +60°C (-58°F~ +140°F)	-50°C~ +60°C (-58°F~ +140°F)	-50°C~ +60°C (-58°F~ +140°F)	-50°C~ +60°C (-58°F~ +140°F)	-50°C~ +60°C (-58°F~ +140°F)	-50°C~ +60°C (-58°F~ +140°F)	-50°C~ +60°C (-58°F~ +140°F)	-50°C~ +60°C (-58°F~ +140°F)	-50°C~ +60°C (-58°F~ +140°F)	-50°C~ +60°C (-58°F~ +140°F)	-50°C~ +60°C (-58°F~ +140°F)
	Humidity	Less than 90% RH	Less than 90% RH		Less than 90% RH	Less than 90% RH	Less than 90% RH	Less than 90% RH	Less than 90% RH	Less than 90% RH	Less than 90% RH	Less than 90% RH	Less than 90% RH	Less than 90% RH	Less than 90% RH	Less than 90% RH	Less than 90% RH	Less than 90% RH	Less than 90% RH	Less than 90% RH

Design and specifications are subject to change without notice. The latest product information / specification can be found at HanwhaVision.com
Hanwha Vision is formerly known as Hanwha Techwin.

© Hanwha Vision CO., LTD. All rights reserved.

Mechanical

Color	Black	Black	Black	Black	Black	Black	Silver	Black	Black	Black	Black	Black	Silver	White	Black	Black	White	Black	Black
Material	Metal	Plastic	Plastic, Metal	Plastic	Plastic, Metal	Plastic	Plastic	Plastic, Metal	Metal	Plastic	Plastic	Plastic	Plastic	Plastic	Plastic, Metal	Metal	Metal	Plastic	Plastic, Metal

Design and specifications are subject to change without notice. The latest product information / specification can be found at HanwhaVision.com
Hanwha Vision is formerly known as Hanwha Techwin.

© Hanwha Vision CO., LTD. All rights reserved.

Mechanical

Product Dimensions	Ø35xL68.9mm	Ø24xL49.8mm	W30xH27.9xD45mm	Ø24xL49.8mm	W30xH27.9xD45mm	Housing: 42.9(W)x33.0(H)x170.0(D)mm (1.69"x1.30"x6.69"), Lens: 30(W)x27.9(H)x45(D)mm (1.18"x1.10"x1.77"), Cable: 8m (26.2ft)	Housing: 42.9(W)x33.0(H)x170.0(D)mm (1.69"x1.30"x6.69") Lens: 30(W)x27.9(H)x45(D)mm (1.18"x1.10"x1.77") Cable: 8m (26.2ft)	66.5x46x175~737mm (2.6"x1.8"x6.9~29.0"), Main Unit: 131.1x28x86mm (5.16"x1.10"x3.39"), Cable: 8m (26.2ft)	ø35x68.9mm (ø1.38x2.71"), Cable: 8m (26.2ft)	ø24x46.6mm (ø0.94x1.83"), Cable: 8m (26.2ft)	Bandit Barrier: 66.5x46x175~688mm (2.62x1.81x6.89~27.09"), Cable: 8m (26.2ft)	48.29(W)x37.0(H)x174.01(D)mm (1.9x1.46x6.85"), Cable: 8m (26.2ft)	48.29(W)x37.0(H)x174.01(D)mm (1.9x1.46x6.85"), Cable: 8m (26.2ft)	48x955x44mm (1.89x37.61x1.73"), Cable: 8m (26.2ft)	30(W)x24.7(H)x45(D)mm (1.18x0.97x1.77"), Cable: 8m (26.2ft)	Lens: ø35x63.2mm (ø1.38x2.49"), Cable: 8m (26.2ft)	ø110.0x77.0mm (ø3.54x2.36"), Cable: 8m (26.2ft)	ø24x44.9mm (ø0.94x1.77"), Cable: 8m (26.2ft)	30(W)x20.5(H)xD45mm (1.18x0.81x1.77"), Cable: 8m (26.2ft)

Design and specifications are subject to change without notice. The latest product information / specification can be found at HanwhaVision.com
Hanwha Vision is formerly known as Hanwha Techwin.

© Hanwha Vision CO., LTD. All rights reserved.

Mechanical

Product Weight	430g	318g	328g	310g	321g	Housing: 70g (0.15lb), Lens: 41g (0.09lb)	Housing: 70g (0.15lb) Lens: 41g (0.09lb)	250~1,000g (0.55~2.205lb), Camera Body: 245g (0.54lb)	108g (0.24lb), Cable: 350g (0.77lb)	35g (0.08lb), Cable: 350g (0.77lb)	Bandit Barrier: 208~1,310g (0.46~2.89lb), Cable: 350g (0.77lb)	124.5g (0.27lb), Cable: 350g (0.77lb)	124.5g (0.27lb), Cable: 350g (0.77lb)	1,043g (2.30lb), Cable: 350g (0.77lb)	46.1g (0.1lb), Cable: 350g (0.77lb)	Lens: 102.3g (0.23lb), Cable: 350g (0.77lb)	455g (1.00lb), Cable: 350g (0.77lb)	34.2g (0.08lb), Cable: 350g (0.77lb)	44.4g (0.1lb), Cable: 350g (0.77lb)
Supported Products	XNB-6002, PNM-9000QB, PNM-C20000QB, XNB-A8004B	XNB-6002, PNM-9000QB, PNM-C20000QB, XNB-A8004B	XNB-6002, PNM-9000QB, PNM-C20000QB, XNB-A8004B	XNB-6002, PNM-9000QB, PNM-C20000QB, XNB-A8004B	XNB-6002, PNM-9000QB, PNM-C20000QB, XNB-A8004B	XNB-6002, PNM-9000QB, PNM-C20000QB, XNB-A8004B	XNB-6002, PNM-9000QB, PNM-C20000QB, XNB-A8004B	XNB-6002, PNM-9000QB, PNM-C20000QB, XNB-A8004B	PNM-C20000QB	PNM-C20000QB	PNM-C20000QB	SLA-F2480DA	PNM-C20000QB	PNM-C20000QB	PNM-C20000QB	PNM-C20000QB	PNM-C20000QB	PNM-C20000QB	

Design and specifications are subject to change without notice. The latest product information / specification can be found at HanwhaVision.com
Hanwha Vision is formerly known as Hanwha Techwin.

© Hanwha Vision CO., LTD. All rights reserved.

Certification & Standards

EMC									FCC 47 CFR 15 Subpart B Class A, ICES-3 (A)/NMB-3 (A), CE/UKCA EN 55032 Class A, EN 50130-4, EN 61000-3-2, EN 61000-3-3, VCCI CISPR 32 Class A, R	FCC 47 CFR 15 Subpart B Class A, ICES-3 (A)/NMB-3 (A), CE/UKCA EN 55032 Class A, EN 50130-4, EN 61000-3-2, EN 61000-3-3, VCCI CISPR 32 Class A, R	FCC 47 CFR 15 Subpart B Class A, ICES-3 (A)/NMB-3 (A), CE/UKCA EN 55032 Class A, EN 50130-4, EN 61000-3-2, EN 61000-3-3, VCCI CISPR 32 Class A, R	FCC 47 CFR 15 Subpart B Class A, ICES-3 (A)/NMB-3 (A), CE/UKCA EN 55032 Class A, EN 50130-4, EN 61000-3-2, EN 61000-3-3, VCCI CISPR 32 Class A, R	FCC 47 CFR 15 Subpart B Class A, ICES-3 (A)/NMB-3 (A), CE/UKCA EN 55032 Class A, EN 50130-4, EN 61000-3-2, EN 61000-3-3, VCCI CISPR 32 Class A, R	FCC 47 CFR 15 Subpart B Class A, ICES-3 (A)/NMB-3 (A), CE/UKCA EN 55032 Class A, EN 50130-4, EN 61000-3-2, EN 61000-3-3, VCCI CISPR 32 Class A, R	FCC 47 CFR 15 Subpart B Class A, ICES-3 (A)/NMB-3 (A), CE/UKCA EN 55032 Class A, EN 50130-4, EN 61000-3-2, EN 61000-3-3, VCCI CISPR 32 Class A, R	FCC 47 CFR 15 Subpart B Class A, ICES-3 (A)/NMB-3 (A), CE/UKCA EN 55032 Class A, EN 50130-4, EN 61000-3-2, EN 61000-3-3, VCCI CISPR 32 Class A, R	FCC 47 CFR 15 Subpart B Class A, ICES-3 (A)/NMB-3 (A), CE/UKCA EN 55032 Class A, EN 50130-4, EN 61000-3-2, EN 61000-3-3, VCCI CISPR 32 Class A, R	FCC 47 CFR 15 Subpart B Class A, ICES-3 (A)/NMB-3 (A), CE/UKCA EN 55032 Class A, EN 50130-4, EN 61000-3-2, EN 61000-3-3, VCCI CISPR 32 Class A, R	FCC 47 CFR 15 Subpart B Class A, ICES-3 (A)/NMB-3 (A), CE/UKCA EN 55032 Class A, EN 50130-4, EN 61000-3-2, EN 61000-3-3, VCCI CISPR 32 Class A, RCMAS/

© Hanwha Vision CO., LTD. All rights reserved.

Certification & Standards

									CMAS/NZS CISPR32 Class A, KSC 9832 Class A, KSC 9835	CMAS/NZS CISPR32 Class A, KSC 9832 Class A, KSC 9835	CMAS/NZS CISPR32 Class A, KSC 9832 Class A, KSC 9835	CMAS/NZS CISPR32 Class A, KSC 9832 Class A, KSC 9835	CMAS/NZS CISPR32 Class A, KSC 9832 Class A, KSC 9835	CMAS/NZS CISPR32 Class A, KSC 9832 Class A, KSC 9835	CMAS/NZS CISPR32 Class A, KSC 9832 Class A, KSC 9835	CMAS/NZS CISPR32 Class A, KSC 9832 Class A, KSC 9835	CMAS/NZS CISPR32 Class A, KSC 9832 Class A, KSC 9835	CMAS/NZS CISPR32 Class A, KSC 9832 Class A, KSC 9835	NZS CISPR32 Class A, KSC 9832 Class A, KSC 9835
Safety									UL 62368-1, CAN/CSA C22.2 NO. 62368-1	UL 62368-1, CAN/CSA C22.2 NO. 62368-1	UL 62368-1, CAN/CSA C22.2 NO. 62368-1	UL 62368-1, CAN/CSA C22.2 NO. 62368-1	UL 62368-1, CAN/CSA C22.2 NO. 62368-1	UL 62368-1, CAN/CSA C22.2 NO. 62368-1	UL 62368-1, CAN/CSA C22.2 NO. 62368-1	UL 62368-1, CAN/CSA C22.2 NO. 62368-1	UL 62368-1, CAN/CSA C22.2 NO. 62368-1	UL 62368-1, CAN/CSA C22.2 NO. 62368-1	UL 62368-1, CAN/CSA C22.2 NO. 62368-1

Design and specifications are subject to change without notice. The latest product information / specification can be found at HanwhaVision.com
Hanwha Vision is formerly known as Hanwha Techwin.

© Hanwha Vision CO., LTD. All rights reserved.

Certification & Standards

Environment									IEC 60529 IP66, NEMA 250 type 4X, IEC 60068-2-1, IEC 60068-2-2, IEC 60068-2-6, IEC 60068-2-14, IEC 60068-2-27, IEC 60068-2-78	IEC 60068-2-1, IEC 60068-2-2, IEC 60068-2-6, IEC 60068-2-14, IEC 60068-2-27, IEC 60068-2-78	None, IEC 60068-2-1, IEC 60068-2-2, IEC 60068-2-6, IEC 60068-2-14, IEC 60068-2-27, IEC 60068-2-78	IEC 60068-2-1, IEC 60068-2-2, IEC 60068-2-6, IEC 60068-2-14, IEC 60068-2-27, IEC 60068-2-78	IEC 60068-2-1, IEC 60068-2-2, IEC 60068-2-6, IEC 60068-2-14, IEC 60068-2-27, IEC 60068-2-78	None, IEC 60068-2-1, IEC 60068-2-2, IEC 60068-2-6, IEC 60068-2-14, IEC 60068-2-27, IEC 60068-2-78	IEC 60068-2-1, IEC 60068-2-2, IEC 60068-2-6, IEC 60068-2-14, IEC 60068-2-27, IEC 60068-2-78	IEC 60529 IP66, NEMA 250 type 4X, IEC 60068-2-1, IEC 60068-2-2, IEC 60068-2-6, IEC 60068-2-14, IEC 60068-2-27, IEC 60068-2-78	IEC 60529 IP66, NEMA 250 type 4X, IEC 62262 IK10, IEC 60068-2-1, IEC 60068-2-2, IEC 60068-2-6, IEC 60068-2-14, IEC 60068-2-27, IEC 60068-2-78	IEC 60068-2-1, IEC 60068-2-2, IEC 60068-2-6, IEC 60068-2-14, IEC 60068-2-27, IEC 60068-2-78	None, IEC 60068-2-1, IEC 60068-2-2, IEC 60068-2-6, IEC 60068-2-14, IEC 60068-2-27, IEC 60068-2-78

Design and specifications are subject to change without notice. The latest product information / specification can be found at HanwhaVision.com
Hanwha Vision is formerly known as Hanwha Techwin.

© Hanwha Vision CO., LTD. All rights reserved.

XNB-A8004B

AI 1-Ch Remote-head Camera

CAD

Unit: mm [inch]

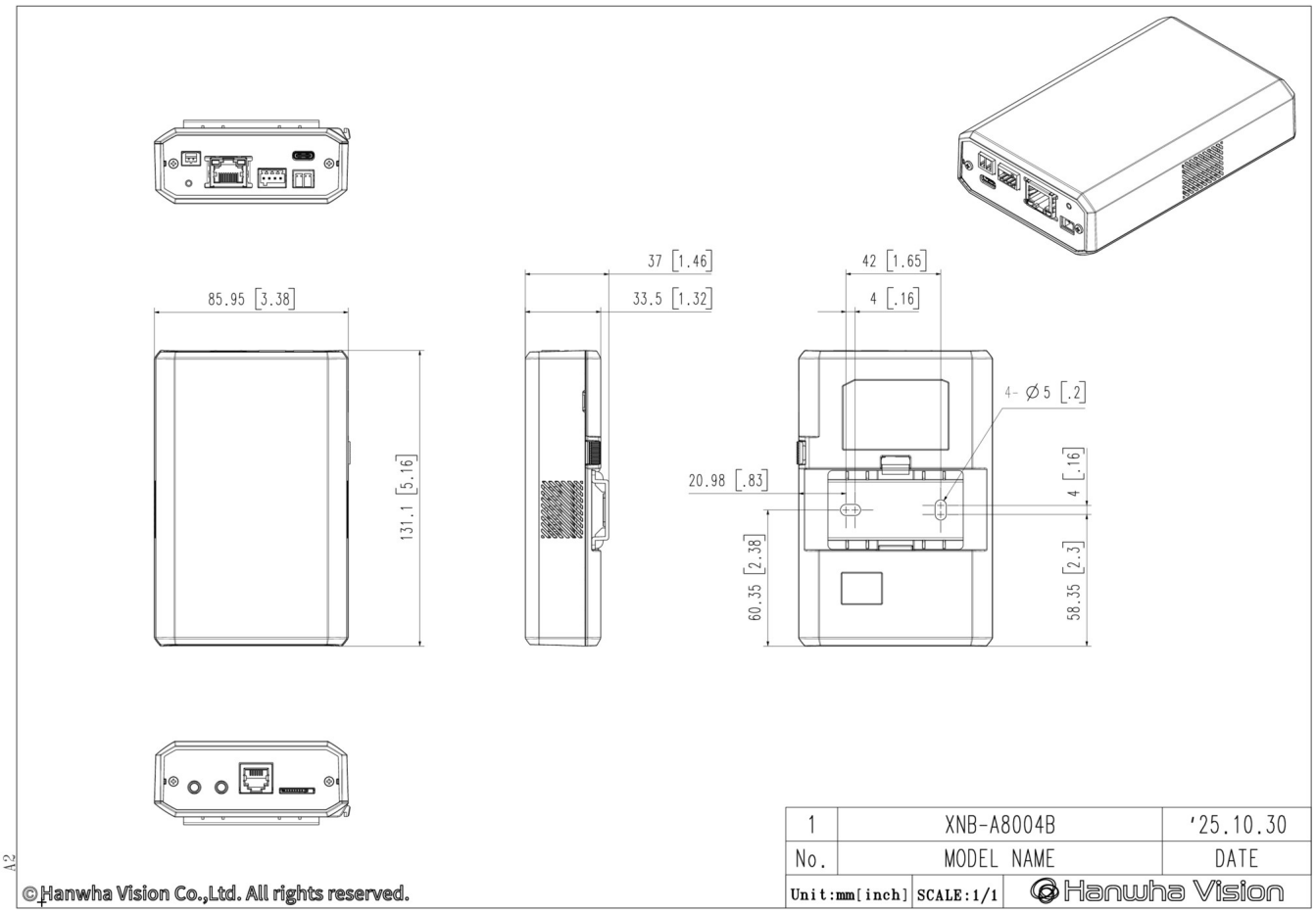

© Hanwha Vision CO., LTD. All rights reserved.