

Network

XNB-A8004B

5MPリモートヘッドカム＆レンズモジュール

Key Features

- 5MP Image Resolution
- 1CH Supported Ch
- Hallyway Rotation
- Shock Detection
- 廊下ビュー
- 衝撃検知
- Wisenet 9 SoC (Dual NPU)によって駆動
- 対応レンズ: SLA-F2480WA(防水), SLA-F2480WDA(防水ドームレンズ), SLA-F1080FA(魚眼レンズ), SLA-F2480BA(バンディットバリアレンズ)
- CVBSビデオ出力、カメラ設定用USB-C

Design and specifications are subject to change without notice. The latest product information / specification can be found at HanwhaVision.com
Hanwha Vision is formerly known as Hanwha Techwin.

© Hanwha Vision CO., LTD. All rights reserved.

XNB-A8004B

5MPリモートヘッドカム＆レンズモジュール





Specifications

映像		
解像度		2560x1920, 2560x1440, 1920x1080, 1600x1200, 1280x960, 1280x720, 1024x768, 800x600, 640x480, 640x360, 320x240, 320x180
Max. Framerate	H.265/H.264	30fps/25fps(60Hz/50Hz)
	MJPEG	30fps(@5MP Max. 5fps)
Video Out		CVBS: 1.0 Vp-p / 75Ω composite for installation, USB: USB Type C. Preview and installation ONLY. Requires WiFi dongle.
レンズ		
Optional Lens		SLA-T1080FA, SLA-T2480A, SLA-T4680A, SLA-T2480VA, SLA-T4680VA, SLA-T2480BA, SLA-T2880BA, SLA-T4680DA, SLA-T4680DSA, SLA-T2480WA, SLA-T2480WDA, SLA-F1080FA, SLA-F2480A, SLA-F4780A, SLA-F2480VA, SLA-F4780VA, SLA-F2480BA, SLA-F2480DA, SLA-F2480DSA, SLA-F2480WA, SLA-F2480WDA, SLA-F2480HA, SLA-T2480HA
技能		
Day & Night		Auto(Electrical)
Backlight Compensation		BLC, HLC , WDR, SSDR
Wide Dynamic Range (dB)		120
Digital Noise Reduction		WiseNR II (Based on AI engine), SSNR V
Digital Image Stabilization		サポート
曇り除去		サポート
モーション検知	Quantity	8ea
	Shape	8point Polygonal zones
Privacy Masking	Quantity	32ea
	Shape	8point Polygonal zones
	Color / Option	灰色, 緑, Red, 青, 黒, 白, モザイク, 紫色, 黄色
	Dynamic Privacy Masking: Color / Option	灰色, 緑, Red, 青, 黒, 白, モザイク, 紫色, 黄色
ゲイン制御		オフ, 最大ゲイン, 手動
ホワイトバランス		ATW, NarrowATW, AWC, 手動, 室内, 屋外
LDC		Support(Not support for fisheye lens)
Electronic Shutter	モード	最小, 最大, アンチフリッカー, Prefer shutter control(Based on AI engine)
	Speed Range	2~1/30,000sec

Design and specifications are subject to change without notice. The latest product information / specification can be found at HanwhaVision.com
Hanwha Vision is formerly known as Hanwha Techwin.

© Hanwha Vision CO., LTD. All rights reserved.

技能

ビデオ回転		FLIPモード, ミラー, Hallway view(90°/270°)
Alarm Interface	In/Out	2 configurable I/O ports
	その他	Support extra alarm I/O via optional I/O box
Alarm Triggers		分析, ネットワーク切断, アラーム入力, タイムスケジュール, MQTT購読, デイ/ナイト, ストレージデバイスの停止
Alarm Events When Alarm Trigger Occurred		File upload(image): e-mail/FTP/SFTP, File upload(video clip): FTP/SFTP, Notification: e-mail, Recording: SD/SDHC/SDXC or NAS recording at event triggers,アラーム出力, Handover: PTZ preset,send message by HTTP/HTTPS/TCP,Audio clip playback, MQTT: publication
オーディオ入力		Selectable(mic in/line in)
オーディオ出力		Line out

分析

Classified Object Type		人, 顔, 車両, ナンバープレート
属性	人	Upper/Lower clothes color, 性別, カバン
	車両	Type(car, bus, truck, motorcycle, bicycle), カラー
	顔	年齢, 性別, 顔マスク, メガネ
サムネイル		ベストショット
分析イベント	Based on AI Engine	対象物検知, 仮想線（交差·方向）, モーション検知, マスク検知, ソーシャルディスタンス検知, 転倒検知, 仮想領域（ローターリング、侵入、Enter、Exit、Appear、Disappear）, Tailgating detection
	通常	焦点ぼけ検知, タンパリング, 音声検出, 衝撃検知
Business Intelligence	Based on AI Engine	人数カウント, キュー管理, ヒートマップ, 車両カウント, 群衆カウント

ネットワーク

Ethernet		Metal shielded RJ-45(10/100BASE-T)
映像圧縮		H.265/H.264: Main/Baseline/High, MJPEG
Audio Compression		G.711(PCM): 8kHz(64kbps), G.726(ADPCM): 8kHz(16/24/32/40kbps), AAC-LC: 16kHz(48kbps), OPUS: 48kHz(64kbps)
Smart codec		WiseStream(Based on AI engine)
ビットレートコントロール		H.265/H.264: CBR or VBR, MJPEG: VBR
Streaming	Unicast	最大 20ユーザー
	マルチキャスト	サポート
	Multiple Streaming	最大 5プロファイル, 3 virtual channel support
プロトコル		IPv4, IPv6, TCP/IP, UDP/IP, RTP(UDP), RTP(TCP), RTCP, RTSP, NTP, HTTP, HTTPS, SSL/TLS, DHCP, FTP, SFTP, ICMP, IGMP, SNMPv1/v2c/v3(MIB-2), ARP, DNS, DDNS, QoS, UPnP, Bonjour, LLDP, CDP, SRTP(TCP, UDP Unicast), MQTT, SMTP(StartTLS), Syslog
Application Programming Interface	ONVIF	s, G, T, M
	その他	SUNAPI(HTTP API), Hanwha Vision Open Platform

Design and specifications are subject to change without notice. The latest product information / specification can be found at HanwhaVision.com
Hanwha Vision is formerly known as Hanwha Techwin.

© Hanwha Vision CO., LTD. All rights reserved.

ネットワーク

Direct Cloud Connection	サポート

セキュリティ

OS / Firmware Protect	Encrypted firmware, Secure boot, Signed firmware
ユーザー認証	ダイジェスト認証, Prevent brute-force attack
Network authentication	IEEE 802.1X(EAP-TLS, EAP-LEAP, EAP-PEAP, MSCHAPv2)
Secure Communication	HTTPS, WSS(WebSocket Secure), SRTP
Access Control	IP-based access control, MAC-based access control, 自動ログアウト
Data Protect	Encryption credentials, Encrypt compress for live recording file export
Audit	Access / System / Event Log management
デバイスID	Device certificate(Hanwha Vision Root CA)
Secure Storage	SDcard partition encrypt(AES-256), Secure element
Supply Chain Security	SBOM
Security Certificate	Secure element(FIPS 140-3 level3, CC EAL6+), ETSI EN 303 645, IEC 62443-4-1

一般

SoC	Type	Wisenet 9
	Dual NPU	Support
メモリ	RAM	4GB
	フラッシュ	8GB eMMC
Edge Storage	Micro SD/SDHC/SDXC	Max. 1TB x 1slot
Edge Storage(OnCloud)	Micro SD/SDHC/SDXC	Max. 1TB x 1slot *Hanwha Vision branded microSD cards have been certified and recommended for OnCloud edge recording.

Environmental & Electrical

動作条件	温度	-10°C~+50°C(+14°F~+122°F)
	湿度	0~95% RH(non-condensing)
保管条件	温度	-50°C~+60°C(-58°F~+140°F)
	湿度	0~90% RH(non-condensing)
Input Voltage		PoE(IEEE802.3af, Class3), 12VDC
消費電力	PoE	Max. 10.6W, typical 9.3W
	12VDC	Max. 10.5W, typical 9.0W
WisePower		電力モニタリング
電源フェールオーバー		サポート

Mechanical

カラー	黒
材料	アルミニウム, PC(Polycarbonate)

Design and specifications are subject to change without notice. The latest product information / specification can be found at HanwhaVision.com
Hanwha Vision is formerly known as Hanwha Techwin.

© Hanwha Vision CO., LTD. All rights reserved.

Mechanical

Material Management	Declaration	RoHS(EU RoHS directive 2011/65/EU and IEC/EN 63000:2018), REACH(Regulation (EC) No. 1907/2006), Conflict mineral policy(Section 1502 of US Dodd Frank Act)
RAL Code		RAL9005
Product Dimensions		131.1(W)x33.5(H)x86(D)mm(5.16x1.32x3.39")
Product Weight		467g(1.03lb)

Certifications & Standards

EMC	FCC 47 CFR 15 Subpart B Class A, ICES-3(A)/NMB-3(A), CE/UKCA - EN55032 Class A, EN 50130-4, EN 61000-3-2, EN 61000-3-3, VCCI CISPR 32 Class A, RCM AS-NZS CISPR 32 Class A, KS C 9832 Class A, KS C 9835
Safety	UL 62368-1, CAN/CSA C22.2 NO. 62368-1
環境	IEC/EN 63000, IEC 62262 IP3X, IEC 60068-2-1, IEC 60068-2-2, IEC 60068-2-6, IEC 60068-2-14, IEC 60068-2-27, IEC 60068-2-78

Design and specifications are subject to change without notice. The latest product information / specification can be found at HanwhaVision.com
Hanwha Vision is formerly known as Hanwha Techwin.

© Hanwha Vision CO., LTD. All rights reserved.

Compatible lenses

the specifications for lenses


SLA-T1080FA


SLA-T2480A


SLA-T2480VA


SLA-T4680A


SLA-T4680VA


SLA-T2480WDA


SLA-T2880BA


SLA-T4680DA


SLA-T4680DSA


SLA-F1080FA


SLA-F2480VA


SLA-F4780A


SLA-F4780VA


SLA-F2480WDA


SLA-F2480WA


SLA-F2480BA


SLA-F2480DA


SLA-F2480DSA

SLA-F2480HA

Design and specifications are subject to change without notice. The latest product information / specification can be found at HanwhaVision.com
Hanwha Vision is formerly known as Hanwha Techwin.

© Hanwha Vision CO., LTD. All rights reserved.

XNB-A8004B

5MPリモートヘッドカム＆レンズモジュール





CAD

Unit: mm [inch]

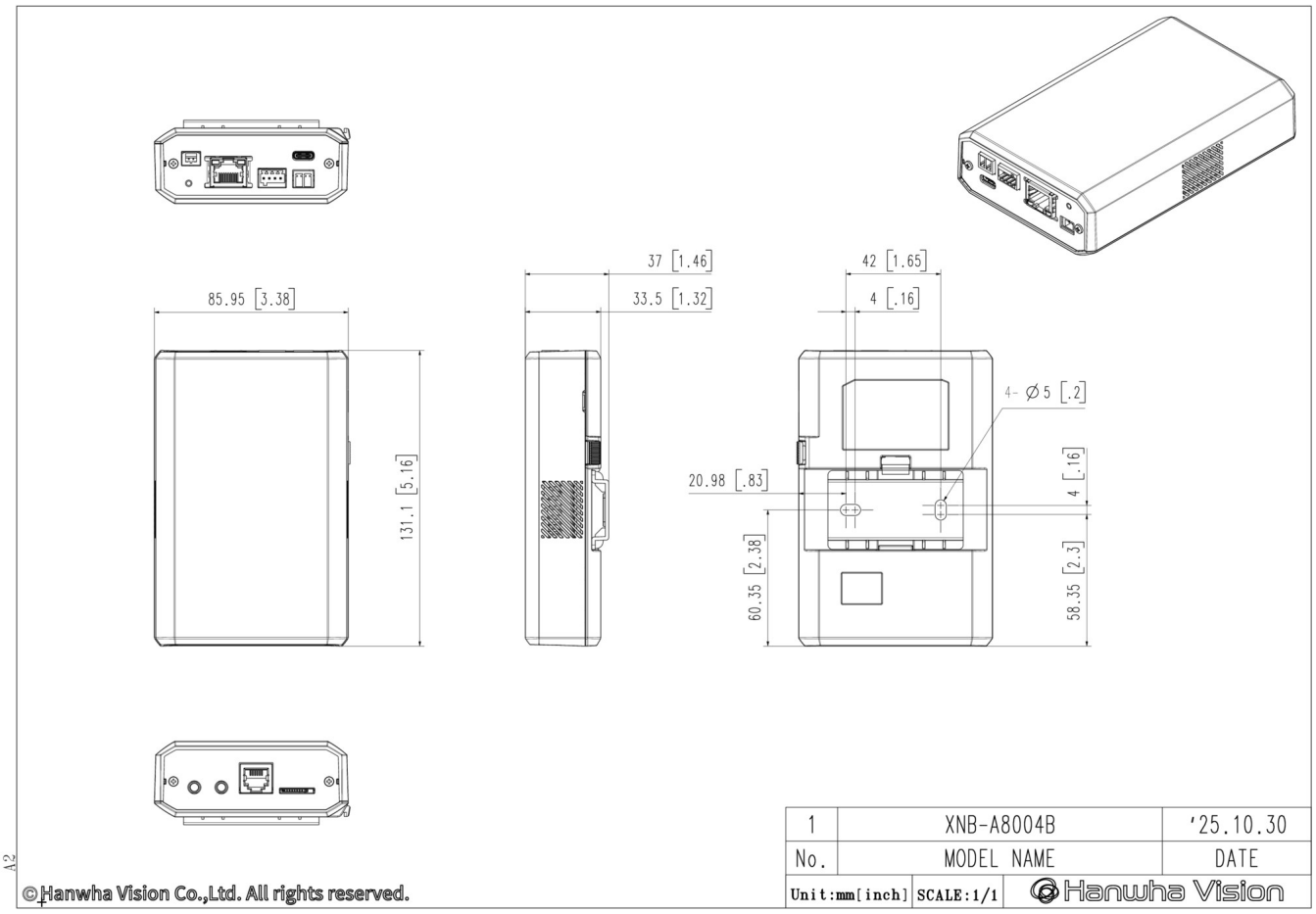

Design and specifications are subject to change without notice. The latest product information / specification can be found at HanwhaVision.com
Hanwha Vision is formerly known as Hanwha Techwin.

© Hanwha Vision CO., LTD. All rights reserved.