

Network

XND-6081RF

2M H.265 ネットワーク IR付 ドームカメラ

Key Features

- 最大2MPの解像度
- 0.015Lux@F1.4（カラー）、0Lux（白黒、IR LEDオン）
- H.265、H.264、MJPEG対応、WiseStreamII対応
- デイナイト（ICR）、WDR（150dB/120dB）
- モジュラー構造
- 縦表示モード（ホールウェイビュー）
- 映像&音声分析、オーディオの再生
- 内蔵ジャイロセンサーによるDISおよび衝撃検知
- IP52、IK10、PoE、12VDC

Design and specifications are subject to change without notice. The latest product information / specification can be found at HanwhaVision.com
Hanwha Vision is formerly known as Hanwha Techwin.

© Hanwha Vision CO., LTD. All rights reserved.

XND-6081RF

2M H.265 ネットワーク IR付 ドームカメラ



Specifications

映像

Imaging Device	サイズ	1/2.8"
	タイプ	CMOS
解像度		1920x1080, 1280x1024, 1280x960, 1280x720, 1024x768, 800x600, 800x448, 720x576, 720x480, 640x480, 640x360, 320x240
Max. Framerate	H.265/H.264	60fps/50fps(60Hz/50Hz)
	MJPEG	30fps
Min. Illumination (Lux)	Color(1/30sec, 30IRE)	0.015
	BW(1/30sec, 30IRE)	0.0015
Video Out		CVBS: 1.0 Vp-p / 75Ω composite for installation, USB: Micro USB Type B. Preview and installation ONLY. Requires WiFi dongle.

レンズ

Focal Length (mm)		2.8~12
Zoom Ratio	Optical	4.3x
Max Aperture Ratio (F number)	Wide	1.4
	Tele	3.6
視野角度	Horizontal	119.5°~27.9°
	Vertical	62.8°~15.7°
	Diagonal	142.1°~32.0°
Min. Object Distance		0.5m(1.64ft)
Focus Control		シンプルフォーカス
Lens Type		DC auto iris(IR corrected), P iris(IR corrected)

Pan / Tilt / Rotate

Pan / Tilt / Rotate Range	Pan	0°~360°
	Tilt	-45°~85°
	回転	0°~355°

技能

Day & Night	Auto(ICR)
Backlight Compensation	BLC, HLC , WDR, SSDR

Design and specifications are subject to change without notice. The latest product information / specification can be found at HanwhaVision.com
Hanwha Vision is formerly known as Hanwha Techwin.

© Hanwha Vision CO., LTD. All rights reserved.

技能

Wide Dynamic Range (dB)		150
Digital Noise Reduction		SSNR V
Digital Image Stabilization		Support(built-in gyro sensor)
曇り除去		サポート
モーション検知	Quantity	8ea
	Shape	8point Polygonal zones
Privacy Masking	Quantity	32ea
	Shape	Polygonal zones
	Color / Option	灰色, 緑, Red, 青, 黒, 白, モザイク
ゲイン制御		低, 中, 高
ホワイトバランス		ATW, AWC, 手動, 室内, 屋外
LDC		サポート
Electronic Shutter	モード	最小, 最大, アンチフリッカー
	Speed Range	2~1/12,000sec
ビデオ回転		FLIPモード, ミラー, Hallway view(90°/270°)
Alarm Interface	In/Out	Input 1ea, Output 1ea
Alarm Triggers		分析, ネットワーク切断, アラーム入力
Alarm Events When Alarm Trigger Occurred		File upload(image): e-mail/FTP, Notification: e-mail, Recording: SD/SDHC/SDXC or NAS recording at event triggers,アラーム出力, Handover: PTZ preset,send message by HTTP/HTTPS/TCP,Audio clip playback
オーディオ入力		Selectable(mic in/line in)
オーディオ出力		Line out
Light Type		IR LED
Light Viewable Length	IR	50m(164.04ft)
IR Wavelength		850nm

分析

分析イベント	通常	焦点ぼけ検知, モーション検知, タンパリング, フォグ検出, 顔検出, 音声検出, サウンド分類, 衝撃検知, Virtual area(Lotering, Intrusion, Enter/Exit, Appear/Disappear), Virtual line(Crossing, Direction) , デジタルオートトラッキング
Business Intelligence	通常	人数カウント, キュー管理, ヒートマップ

ネットワーク

Ethernet	RJ-45(10/100BASE-T)
映像圧縮	H.265/H.264: Main/Baseline/High, MJPEG
Audio Compression	G.711 u-law /G.726 selectable,G.726(ADPCM) 8kHz,G.711 8kHz, G.726: 16kbps,24kbps,32kbps,40kbps, AAC-LC: 48kbps at 16kHz
Smart codec	手動, WiseStream II

Design and specifications are subject to change without notice. The latest product information / specification can be found at HanwhaVision.com
Hanwha Vision is formerly known as Hanwha Techwin.

© Hanwha Vision CO., LTD. All rights reserved.

ネットワーク

ビットレートコントロール		H.265/H.264: CBR or VBR, MJPEG: VBR
Streaming	Unicast	最大 20ユーザー
	マルチキャスト	サポート
	Multiple Streaming	最大 10プロファイル
プロトコル		IPv4, IPv6, TCP/IP, UDP/IP, RTP(UDP), RTP(TCP), RTCP, RTSP, NTP, HTTP, HTTPS, SSL/TLS, DHCP, FTP, SMTP, ICMP, IGMP, SNMPv1/v2c/v3(MIB-2), ARP, DNS, DDNS, QoS, UPnP, Bonjour, LLDP, SRTP(TCP, UDP Unicast), PIM-SM
Application Programming Interface	ONVIF	s, G, T
	その他	SUNAPI(HTTP API), Hanwha Vision Open Platform
Direct Cloud Connection		Optional (needs gateway)

セキュリティ

OS / Firmware Protect	Encrypted firmware, Secure boot, Signed firmware
ユーザー認証	ダイジェスト認証
Network authentication	IEEE 802.1X(EAP-TLS, EAP-LEAP)
Secure Communication	HTTPS, WSS(WebSocket Secure), SRTP
Access Control	IP-based access control
Data Protect	Encryption credentials, Encrypt compress for live recording file export
Audit	Access / System / Event Log management
Secure Storage	SDcard partition encrypt(AES-256)

一般

メモリ	RAM	1GB
	フラッシュ	256MB
Edge Storage	Micro SD/SDHC/SDXC	Max. 256GB x 2slot(Total 512GB)

Environmental & Electrical

動作条件	温度	-25°C~+60°C(-13°F~+140°F)
	湿度	0~90% RH(non-condensing)
保管条件	温度	-50°C~+60°C(-58°F~+140°F)
	湿度	0~90% RH(non-condensing)
Input Voltage		PoE(IEEE802.3af, Class3), 12VDC
消費電力	PoE	Max 12.95W, typical 9.40W
	12VDC	Max 10.8W, typical 7.60W

Mechanical

カラー	白
材料	アルミニウム
RAL Code	RAL9003

Design and specifications are subject to change without notice. The latest product information / specification can be found at HanwhaVision.com
Hanwha Vision is formerly known as Hanwha Techwin.

© Hanwha Vision CO., LTD. All rights reserved.

Mechanical

Product Dimensions	ø205x155mm(8.07x6.10")
Product Weight	1,800g(3.97lb)

Certifications & Standards

環境	IEC 60529 IP52, IEC 62262 IK10

Design and specifications are subject to change without notice. The latest product information / specification can be found at HanwhaVision.com
Hanwha Vision is formerly known as Hanwha Techwin.

© Hanwha Vision CO., LTD. All rights reserved.

XND-6081RF

2M H.265 ネットワーク IR付 ドームカメラ



CAD

Unit: mm [inch]

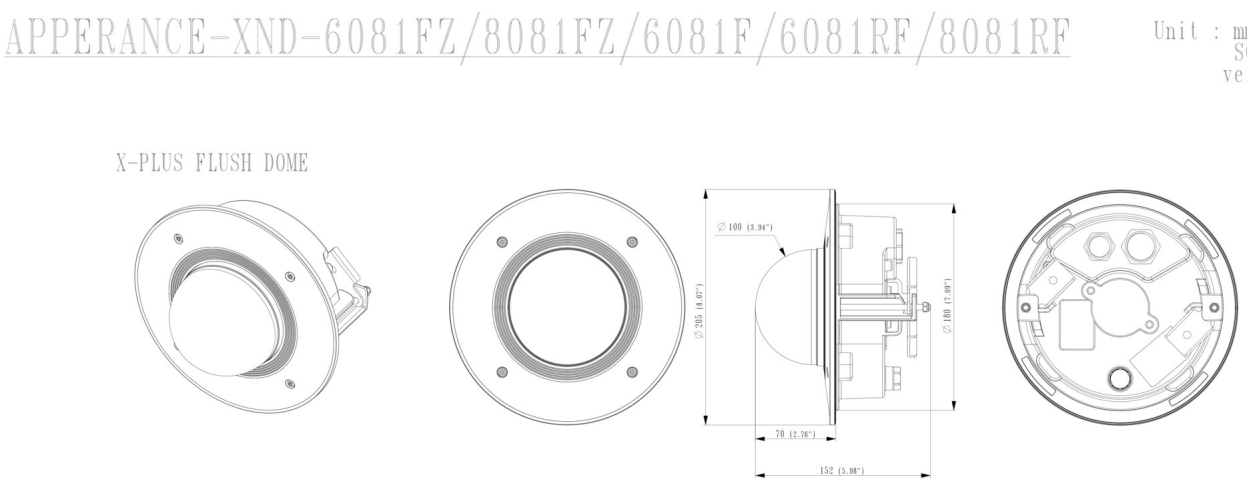

Design and specifications are subject to change without notice. The latest product information / specification can be found at HanwhaVision.com
Hanwha Vision is formerly known as Hanwha Techwin.

© Hanwha Vision CO., LTD. All rights reserved.

Compatible Devices



SPB-FCD85W

Design and specifications are subject to change without notice. The latest product information / specification can be found at HanwhaVision.com
Hanwha Vision is formerly known as Hanwha Techwin.

© Hanwha Vision CO., LTD. All rights reserved.