

Network Купольные

XND-6081RV

2МП H.265 сетевая купольная камера с ИК-подсветкой

Key Features

- Макс. разрешение 2 Мп
- 0,015 лк при F1.4 (цветн.), 0 лк (Ч/Б, ИК светодиод вкл.)
- Дневной и ночной (с выдвижным ИК фильтром) режимы, WDR (150/120 дБ)
- Функция обзора коридоров, поддержка WiseStream II
- Видео- и аудиоаналитика, воспроизведение аудио
- Цифровая стабилизация изображения и обнаружение ударов с помощью встроенного гироскопического датчика
- Модульная конструкция, технология PoE, 12 В пост. тока
- IP52, IK10

Design and specifications are subject to change without notice. The latest product information / specification can be found at HanwhaVision.com
Hanwha Vision is formerly known as Hanwha Techwin.

© Hanwha Vision CO., LTD. All rights reserved.

XND-6081RV

2МП H.265 сетевая купольная камера с ИК-подсветкой



Specifications

Video

Imaging Device	Size	1/2.8"
	Type	CMOS
Resolution		1920x1080, 1280x1024, 1280x960, 1280x720, 1024x768, 800x600, 800x448, 720x576, 720x480, 640x480, 640x360, 320x240
Max. Framerate	H.265/H.264	60fps/50fps(60Hz/50Hz)
	MJPEG	30fps
Min. Illumination (Lux)	Color(1/30sec, 30IRE)	0.015
	BW(1/30sec, 30IRE)	0.0015
Video Out		CVBS: 1.0 Vp-p / 75Ω composite for installation, USB: Micro USB Type B. Preview and installation ONLY. Requires WiFi dongle.

Lens

Focal Length (mm)		2.8~12
Zoom Ratio	Optical	4.3x
Max Aperture Ratio (F number)	Wide	1.4
	Tele	3.6
Angular Field of View	Horizontal	119.5°~27.9°
	Vertical	62.8°~15.7°
	Diagonal	142.1°~32.0°
Min. Object Distance		0.5m(1.64ft)
Focus Control		Simple focus
Lens Type		DC auto iris(IR corrected), P iris(IR corrected)

Pan / Tilt / Rotate

Pan / Tilt / Rotate Range	Pan	0°~360°
	Tilt	-45°~85°
	Rotate	0°~355°

Operational

Day & Night	Auto(ICR)
Backlight Compensation	BLC, HLC, WDR, SSDR

Design and specifications are subject to change without notice. The latest product information / specification can be found at HanwhaVision.com
Hanwha Vision is formerly known as Hanwha Techwin.

© Hanwha Vision CO., LTD. All rights reserved.

Operational

Wide Dynamic Range (dB)		150
Digital Noise Reduction		SSNR V
Digital Image Stabilization		Support(built-in gyro sensor)
Defog		Support
Motion Detection	Quantity	8ea
	Shape	8point Polygonal zones
Privacy Masking	Quantity	32ea
	Shape	Polygonal zones
	Color / Option	Gray, Green, Red, Blue, Black, White, Mosaic
Gain Control		Low, Middle, High
White Balance		ATW, AWC, Manual, Indoor, Outdoor
LDC		Support
Electronic Shutter	Mode	Minimum, Maximum, Anti flicker
	Speed Range	2~1/12,000sec
Video Rotation		Flip, Mirror, Hallway view(90°/270°)
Alarm Interface	In/Out	Input 1ea, Output 1ea
Alarm Triggers		Analytics, Network disconnect, Alarm input
Alarm Events When Alarm Trigger Occurred		File upload(image): e-mail/FTP, Notification: e-mail, Recording: SD/SDHC/SDXC or NAS recording at event triggers,Alarm output, Handover: PTZ preset,send message by HTTP/HTTPS/TCP,Audio clip playback
Audio In		Selectable(mic in/line in), Built-in mic
Audio Out		Line out
Light Type		IR LED
Light Viewable Length	IR	50m(164.04ft)
IR Wavelength		850nm

Analytics

Analytics Events	Normal	Defocus detection, Motion detection, Tampering, Fog detection, Face detection, Audio detection, Sound classification, Shock detection, Virtual area(Lotering, Intrusion, Enter/Exit, Appear/Disappear), Virtual line(Crossing, Direction) , Digital auto tracking
Business Intelligence	Normal	People counting, Queue management, Heatmap

Network

Ethernet	RJ-45(10/100BASE-T)
Video Compression	H.265: Main, H.264: Main/Baseline/High,MJPEG
Audio Compression	G.711 u-law /G.726 selectable,G.726(ADPCM) 8kHz,G.711 8kHz, G.726: 16kbps,24kbps,32kbps,40kbps, AAC-LC: 48kbps at 16kHz
Smart Codec	Manual, WiseStream II

Design and specifications are subject to change without notice. The latest product information / specification can be found at HanwhaVision.com
Hanwha Vision is formerly known as Hanwha Techwin.

© Hanwha Vision CO., LTD. All rights reserved.

Network

Bitrate Control		H.265/H.264: CBR or VBR, MJPEG: VBR
Streaming	Unicast	Up to 20 users
	Multicast	Support
	Multiple Streaming	Up to 10 profiles
Protocol		IPv4, IPv6, TCP/IP, UDP/IP, RTP(UDP), RTP(TCP), RTCP, RTSP, NTP, HTTP, HTTPS, SSL/TLS, DHCP, FTP, SMTP, ICMP, IGMPv2, SNMPv1/v2c/v3(MIB-2), ARP, DNS, DDNS, QoS, UPnP, Bonjour, LLDP, SRTP(TCP, UDP Unicast), PIM-SM
Application Programming Interface	ONVIF	S, G, T
	Others	SUNAPI(HTTP API), Hanwha Vision Open Platform
Direct Cloud Connection		Optional (needs gateway)

Security

OS / Firmware Protect	Encrypted firmware, Secure boot, Signed firmware
User authentication	Digest authentication
Network authentication	IEEE 802.1X(EAP-TLS, EAP-LEAP)
Secure Communication	HTTPS, WSS(WebSocket Secure), SRTP
Access Control	IP-based access control
Data Protect	Encryption credentials, Encrypt compress for live recording file export
Audit	Access / System / Event Log management
Secure Storage	SDcard partition encrypt(AES-256)

General

Memory	RAM	1GB
	Flash	256MB
Edge Storage	Micro SD/SDHC/SDXC	Max. 256GB x 2slot(Total 512GB)

Environmental & Electrical

Operating Condition	Temperature	-25°C~+60°C(-13°F~+140°F)
	Humidity	0~90% RH(non-condensing)
Storage Condition	Temperature	-50°C~+60°C(-58°F~+140°F)
	Humidity	0~90% RH(non-condensing)
Input Voltage		PoE(IEEE802.3af, Class3), 12VDC
Power Consumption	PoE	Max. 12.95W, typical 9.4W
	12VDC	Max. 10.8W, typical 7.6W

Mechanical

Color	White
Material	Aluminum
RAL Code	RAL9003

Design and specifications are subject to change without notice. The latest product information / specification can be found at HanwhaVision.com
Hanwha Vision is formerly known as Hanwha Techwin.

© Hanwha Vision CO., LTD. All rights reserved.

Mechanical

Product Dimensions	ø160x125mm(6.30x4.92")
Product Weight	1,450g(3.20lb)

Certifications & Standards

Environment	IEC 60529 IP52, IEC 62262 IK10

Design and specifications are subject to change without notice. The latest product information / specification can be found at HanwhaVision.com
Hanwha Vision is formerly known as Hanwha Techwin.

© Hanwha Vision CO., LTD. All rights reserved.

XND-6081RV

2МП H.265 сетевая купольная камера с ИК-подсветкой



CAD

Unit: mm [inch]

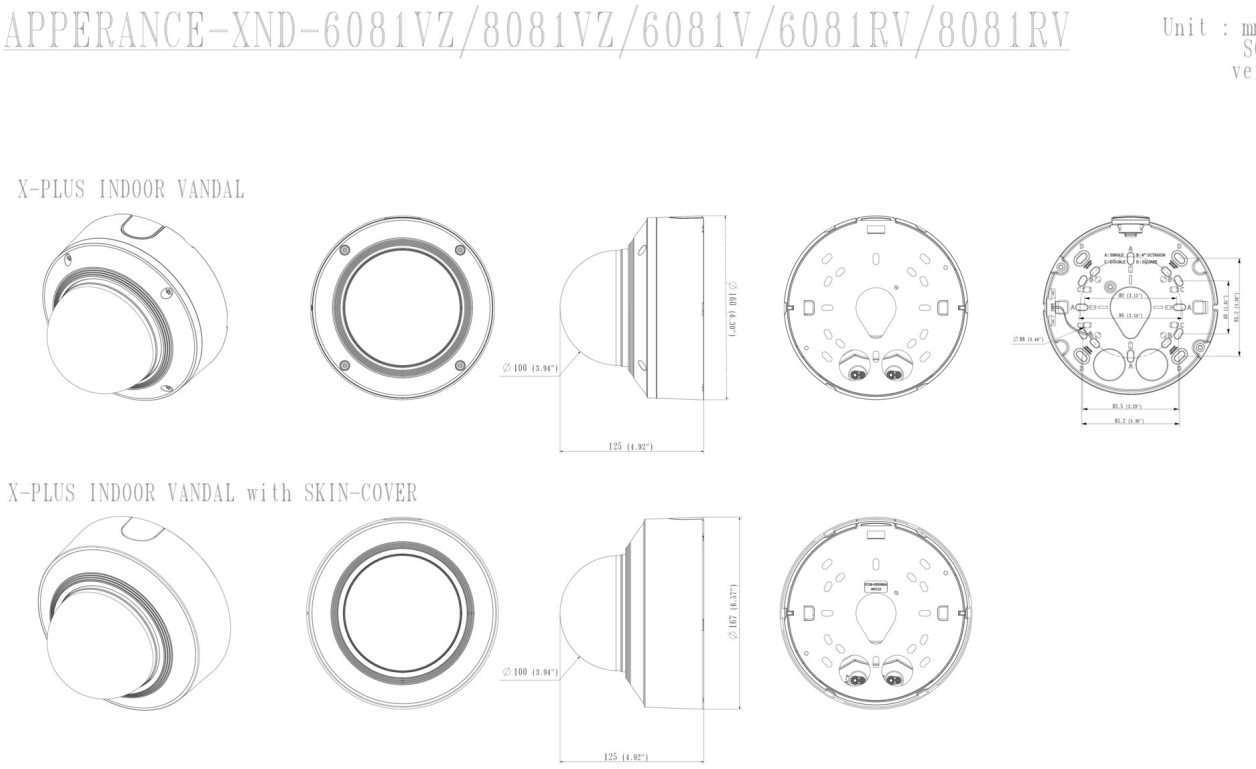

Design and specifications are subject to change without notice. The latest product information / specification can be found at HanwhaVision.com
Hanwha Vision is formerly known as Hanwha Techwin.

© Hanwha Vision CO., LTD. All rights reserved.

Compatible Devices



SBP-300LMW



SBP-300WMW1

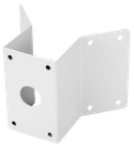

SBP-300KMW



SBP-300BW



SBP-300PMW



SBP-300WMW



SPB-IND85W



SBP-300NBW



SBP-300CMW



SBP-167HMW

Design and specifications are subject to change without notice. The latest product information / specification can be found at HanwhaVision.com
Hanwha Vision is formerly known as Hanwha Techwin.

© Hanwha Vision CO., LTD. All rights reserved.