

Network Купольные

XND-8030R

5МП H.265 сетевая купольная камера с ИК-подсветкой

Key Features

- Встроенный объектив 3,7/4,6/7,0 мм с постоянным фокусом
- До 30 кад/с при любом разрешении (H.265/H.264)
- Обнаружение праздношатания, направления движения, тумана
- Цифровое автоматическое слежение, распознавание звуков по типам, тепловая карта
- Подсчет людей, управление очередями, обнаружение внешнего воздействия
- Обнаружение движения, передача данных на PTZ камеру
- Два слота для карты памяти SD (макс. 512 гб), поддержка WiseStream II
- Дальность видимости с ИК подсветкой 30 м, IK08

Design and specifications are subject to change without notice. The latest product information / specification can be found at HanwhaVision.com
Hanwha Vision is formerly known as Hanwha Techwin.

© Hanwha Vision CO., LTD. All rights reserved.

XND-8030R

5МП H.265 сетевая купольная камера с ИК-подсветкой



Specifications

Video

Imaging Device	Size	1/1.8"
	Type	CMOS
Resolution		2560x1920, 2560x1440, 2048x1536, 1920x1080, 1600x1200, 1280x1024, 1280x960, 1280x720, 1024x768, 800x600, 800x448, 720x576, 720x480, 640x480, 640x360, 320x240
Max. Framerate	H.265/H.264	30fps/25fps(60Hz/50Hz)
	MJPEG	30fps
Min. Illumination (Lux)	Color(1/30sec, 30IRE)	0.16
	BW(1/30sec, 30IRE)	0.016
Video Out		CVBS: 1.0 Vp-p / 75Ω composite for installation, USB: Micro USB Type B. Preview and installation ONLY. Requires WiFi dongle.

Lens

Focal Length (mm)		4.6
Max Aperture Ratio (F number)	Wide	1.6
Angular Field of View	Horizontal	77.9°
	Vertical	57.9°
	Diagonal	98.7°
Min. Object Distance		0.4m(1.31ft)
Focus Control		Fixed
Lens Type		Fixed iris

Pan / Tilt / Rotate

Pan / Tilt / Rotate Range	Pan	0°~354°
	Tilt	0°~67°
	Rotate	0°~355°

Operational

Day & Night	Auto(ICR)
Backlight Compensation	BLC, HLC, WDR, SSDR
Wide Dynamic Range (dB)	120

Design and specifications are subject to change without notice. The latest product information / specification can be found at HanwhaVision.com
Hanwha Vision is formerly known as Hanwha Techwin.

© Hanwha Vision CO., LTD. All rights reserved.

Operational

Digital Noise Reduction		SSNR V
Digital Image Stabilization		Support
Defog		Support
Motion Detection	Quantity	8ea
	Shape	8point Polygonal zones
Privacy Masking	Quantity	32ea
	Shape	Polygonal zones
	Color / Option	Gray, Green, Red, Blue, Black, White, Mosaic
Gain Control		Low, Middle, High
White Balance		ATW, AWC, Manual, Indoor, Outdoor
LDC		Support
Electronic Shutter	Mode	Minimum, Maximum, Anti flicker
	Speed Range	2~1/12,000sec
Video Rotation		Flip, Mirror, Hallway view(90°/270°)
Alarm Interface	In/Out	Input 1ea, Output 1ea
Alarm Triggers		Analytics, Network disconnect, Alarm input
Alarm Events When Alarm Trigger Occurred		File upload(image): e-mail/FTP, Notification: e-mail, Recording: SD/SDHC/SDXC or NAS recording at event triggers,Alarm output, Handover: PTZ preset
Audio In		Selectable(mic in/line in), Built-in mic
Audio Out		Line out
Light Type		IR LED
Light Viewable Length	IR	30m(98.42ft)
IR Wavelength		850nm

Analytics

Analytics Events	Normal	Defocus detection, Motion detection, Tampering, Fog detection, Face detection, Audio detection, Sound classification, Virtual area(Lotering, Intrusion, Enter/Exit, Appear/Disappear), Virtual line(Crossing, Direction) , Digital auto tracking
Business Intelligence	Normal	People counting, Queue management, Heatmap

Network

Ethernet	RJ-45(10/100BASE-T)
Video Compression	H.265: Main, H.264: Main/Baseline/High,MJPEG
Audio Compression	G.711 u-law /G.726 selectable,G.726(ADPCM) 8kHz,G.711 8kHz, G.726: 16kbps,24kbps,32kbps,40kbps, AAC-LC: 48kbps at 16kHz
Smart Codec	Manual, WiseStream II

Design and specifications are subject to change without notice. The latest product information / specification can be found at HanwhaVision.com
Hanwha Vision is formerly known as Hanwha Techwin.

© Hanwha Vision CO., LTD. All rights reserved.

Network

Bitrate Control		H.265/H.264: CBR or VBR, MJPEG: VBR
Streaming	Unicast	Up to 20 users
	Multicast	Support
	Multiple Streaming	Up to 10 profiles
Protocol		IPv4, IPv6, TCP/IP, UDP/IP, RTP(UDP), RTP(TCP), RTCP, RTSP, NTP, HTTP, HTTPS, SSL/TLS, DHCP, FTP, SMTP, ICMP, IGMPv2, SNMPv1/v2c/v3(MIB-2), ARP, DNS, DDNS, QoS, UPnP, Bonjour, LLDP, SRTP(TCP, UDP Unicast), PIM-SM
Application Programming Interface	ONVIF	S, G, T
	Others	SUNAPI(HTTP API), Hanwha Vision Open Platform

Security

User authentication		Digest authentication
Network authentication		IEEE 802.1X(EAP-TLS, EAP-LEAP)
Secure Communication		HTTPS, SRTP
Access Control		IP-based access control
Audit		Access / System / Event Log management

General

Memory	RAM	1GB
	Flash	256MB
Edge Storage	Micro SD/SDHC/SDXC	Max. 256GB x 2slot(Total 512GB)

Environmental & Electrical

Operating Condition	Temperature	-10°C~+55°C(+14°F~+131°F)
	Humidity	0~90% RH(non-condensing)
Storage Condition	Temperature	-50°C~+60°C(-58°F~+140°F)
	Humidity	0~90% RH(non-condensing)
Input Voltage		PoE(IEEE802.3af, Class3), 12VDC
Power Consumption	PoE	Max 9.00W
	12VDC	Max 8.00W

Mechanical

Color	Ivory
Material	Aluminum
Product Dimensions	Ø110.0x90.0mm(Ø4.33x3.54")
Product Weight	380g(0.84 lb)

Certifications & Standards

Environment	IEC 62262 IK08

Design and specifications are subject to change without notice. The latest product information / specification can be found at HanwhaVision.com
Hanwha Vision is formerly known as Hanwha Techwin.

© Hanwha Vision CO., LTD. All rights reserved.

XND-8030R

5МП H.265 сетевая купольная камера с ИК-подсветкой



CAD

Unit: mm [inch]

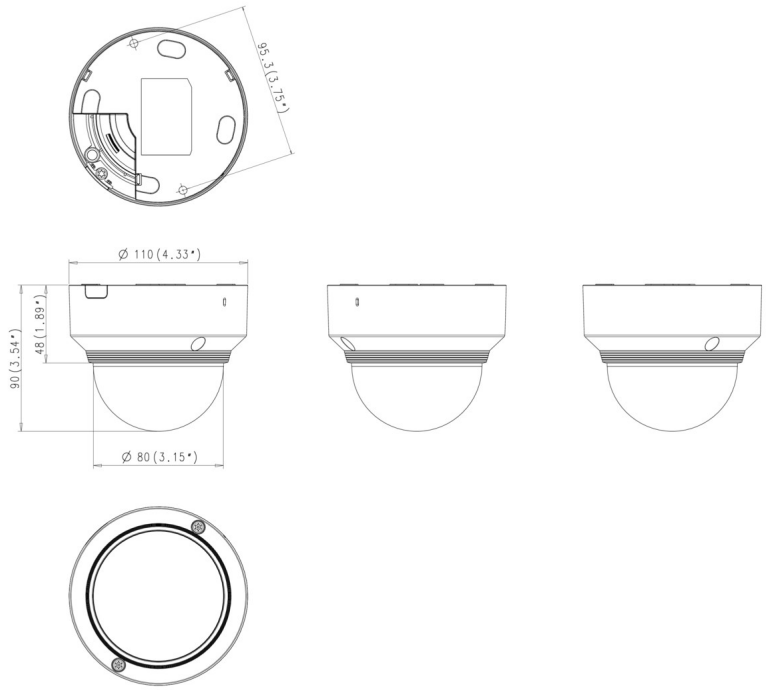

Design and specifications are subject to change without notice. The latest product information / specification can be found at HanwhaVision.com
Hanwha Vision is formerly known as Hanwha Techwin.

© Hanwha Vision CO., LTD. All rights reserved.

Compatible Devices



SPB-IND11



SBP-300CM



SBP-120WM



SBP-300PM



SBP-300KM



SBP-300WM1



SBP-300LM



SBP-390WM2



SBP-300WM



SBP-300B



SBP-300HM7

Design and specifications are subject to change without notice. The latest product information / specification can be found at HanwhaVision.com
Hanwha Vision is formerly known as Hanwha Techwin.

© Hanwha Vision CO., LTD. All rights reserved.