Hanwha Vision



Network

XND-8081FZ

5MP Flush Mount Network Dome PTRZ Camera

Key Features

- 5 megapixel resolution
- 3.6~9.4mm (2.6x) motorized varifocal lens with PTRZ
- 30fps@all resolutions (H.265/H.264)
- H.265, H.264, MJPEG codec supported, multiple streaming
- Day & Night (ICR), WDR (120dB), Defog
- Shock detection, Loitering, Directional detection, Fog detection, Audio detection, Digital auto tracking, Sound classification, Tampering
- Motion detection, Handover, Audio event playback
- Dual SD/SDHC/SDXC memory slots (Max. 512GB)
- Hallway view, WiseStream II support, IP52, plenum-rated
- LDC support (Lens Distortion Correction)
- PoE / 12V DC, Bi-directional audio support
- White camera cover to blend in with ceiling
- Weathercap included

Design and specifications are subject to change without notice. The latest product information / specification can be found at HanwhaVision.com
Hanwha Vision is formerly known as Hanwha Techwin.

© Hanwha Vision CO., LTD. All rights reserved.

XND-8081FZ

5MP Flush Mount Network Dome PTRZ Camera



Specifications

Video

Imaging Device	Size	1/1.8"
	Type	CMOS
Resolution		2560x1920, 2560x1440, 1920x1080, 1600x1200, 1280x1024, 1280x960, 1280x720, 1024x768, 800x600, 800x448, 720x576, 720x480, 640x480, 640x360, 320x240
Max. Framerate	H.265/H.264	30fps/25fps(60Hz/50Hz)
	MJPEG	30fps(@5MP Max. 5fps)
Min. Illumination (Lux)	Color(1/30sec, 30IRE)	0.07
	BW(1/30sec, 30IRE)	0.007
Video Out		USB: Micro USB Type B. Preview and installation ONLY. Requires WiFi dongle.

Lens

Focal Length (mm)		3.6~9.4
Zoom Ratio	Optical	2.6x
Max Aperture Ratio (F number)	Wide	1.2
	Tele	2.4
Angular Field of View	Horizontal	102.5°~38.7°
	Vertical	74.2°~29.0°
	Diagonal	135.5°~48.6°
Min. Object Distance		0.5m(1.64ft)
Focus Control		Simple focus, Manual
Lens Type		DC auto iris, P iris(IR corrected)

Pan / Tilt / Rotate

Pan / Tilt / Rotate Range	Pan	-175°~175°
	Tilt	0°~85°
	Rotate	-175°~175°

Operational

Day & Night	Auto(ICR)
Backlight Compensation	BLC, HLC, WDR, SSDR

Design and specifications are subject to change without notice. The latest product information / specification can be found at HanwhaVision.com
Hanwha Vision is formerly known as Hanwha Techwin.

© Hanwha Vision CO., LTD. All rights reserved.

Operational

Wide Dynamic Range (dB)		120
Digital Noise Reduction		SSNR V
Digital Image Stabilization		Support
Defog		Support
Motion Detection	Quantity	8ea
	Shape	8point Polygonal zones
Privacy Masking	Quantity	32ea
	Shape	4point Quadrangle zones
	Color / Option	Gray, Green, Red, Blue, Black, White, Mosaic
Gain Control		Support
White Balance		ATW, AWC, Manual, Indoor, Outdoor
LDC		Support
Electronic Shutter	Mode	Minimum, Maximum, Anti flicker
	Speed Range	2~1/12,000sec
Video Rotation		Flip, Mirror, Hallway view(90°/270°)
Alarm Interface	In/Out	Input 1ea, Output 1ea
Alarm Triggers		Analytics, Network disconnect, Alarm input
Alarm Events When Alarm Trigger Occurred		File upload(image): e-mail/FTP, Notification: e-mail, Recording: SD/SDHC/SDXC or NAS recording at event triggers,Alarm output, Handover: PTZ preset,Audio clip playback
Audio In		Selectable(mic in/line in)
Audio Out		Line out

Analytics

Analytics Events	Normal	Defocus detection, Motion detection, Tampering, Fog detection, Face detection, Audio detection, Sound classification, Shock detection, Virtual area(Lotering, Intrusion, Enter/Exit, Appear/Disappear), Virtual line(Crossing, Direction) , Digital auto tracking
Business Intelligence	Normal	People counting, Queue management, Heatmap

Network

Ethernet	RJ-45(10/100BASE-T)
Video Compression	H.265/H.264: Main/Baseline/High, MJPEG
Audio Compression	G.711 u-law /G.726 selectable,G.726(ADPCM) 8kHz,G.711 8kHz, G.726: 16kbps,24kbps,32kbps,40kbps, AAC-LC: 48kbps at 16kHz
Smart Codec	Manual, WiseStream II
Bitrate Control	H.265/H.264: CBR or VBR, MJPEG: VBR

Design and specifications are subject to change without notice. The latest product information / specification can be found at HanwhaVision.com
Hanwha Vision is formerly known as Hanwha Techwin.

© Hanwha Vision CO., LTD. All rights reserved.

Network

Streaming	Unicast	Up to 20 users
	Multicast	Support
	Multiple Streaming	Up to 10 profiles
Protocol		IPv4, IPv6, TCP/IP, UDP/IP, RTP(UDP), RTP(TCP), RTCP, RTSP, NTP, HTTP, HTTPS, SSL/TLS, DHCP, FTP, SMTP, ICMP, IGMPv2, SNMPv1/v2c/v3(MIB-2), ARP, DNS, DDNS, QoS, UPnP, Bonjour, LLDP, SRTP(TCP, UDP Unicast), PIM-SM
Application Programming Interface	ONVIF	S, G, T
	Others	SUNAPI(HTTP API), Hanwha Vision Open Platform
Direct Cloud Connection		Optional (needs gateway)

Security

User authentication	Digest authentication
Network authentication	IEEE 802.1X(EAP-TLS, EAP-LEAP)
Secure Communication	HTTPS, SRTP
Access Control	IP-based access control
Data Protect	Encryption credentials, Encrypt compress for live recording file export
Audit	Access / System / Event Log management

General

Memory	RAM	1GB
	Flash	256MB
Edge Storage	Micro SD/SDHC/SDXC	Max. 256GB x 2slot(Total 512GB)

Environmental & Electrical

Operating Condition	Temperature	-25°C~+60°C(-13°F~+140°F)
	Humidity	0~90% RH(non-condensing)
Storage Condition	Temperature	-50°C~+60°C(-58°F~+140°F)
	Humidity	0~90% RH(non-condensing)
Input Voltage		PoE(IEEE802.3af, Class3), 12VDC
Power Consumption	PoE	Max 11W, typical 5.40W
	12VDC	Max 9W, typical 3.75W

Mechanical

Color	White
Material	Aluminum
RAL Code	RAL9003
Product Dimensions	Ø205x163mm(Ø8.1x6.4")
Product Weight	1.85kg(4.08lb)

Design and specifications are subject to change without notice. The latest product information / specification can be found at HanwhaVision.com
Hanwha Vision is formerly known as Hanwha Techwin.

© Hanwha Vision CO., LTD. All rights reserved.

Certifications & Standards

Environment	IEC 60529 IP52, IEC 62262 IK10

Design and specifications are subject to change without notice. The latest product information / specification can be found at HanwhaVision.com
Hanwha Vision is formerly known as Hanwha Techwin.

© Hanwha Vision CO., LTD. All rights reserved.

XND-8081FZ

5MP Flush Mount Network Dome PTRZ Camera



CAD

Unit: mm [inch]

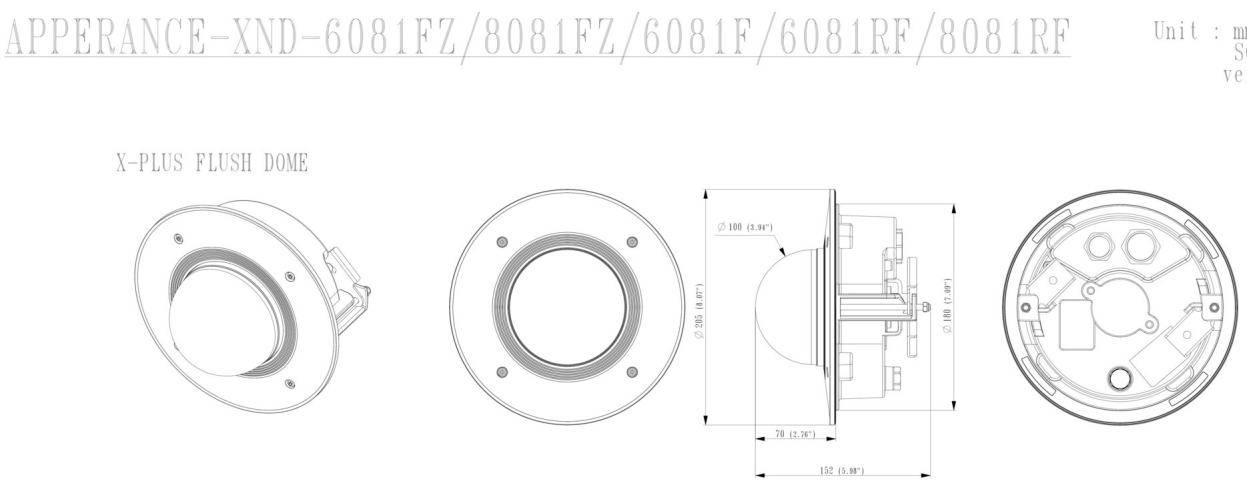

Design and specifications are subject to change without notice. The latest product information / specification can be found at HanwhaVision.com
Hanwha Vision is formerly known as Hanwha Techwin.

© Hanwha Vision CO., LTD. All rights reserved.