Hanwha Vision



Network Dome

XND-8081RV

5M H.265 ネットワーク IR付 ドームカメラ

Key Features

- 最大5MPの解像度
- 0.07Lux@F1.4 (カラー) 、0Lux (白黒、IR LEDオン)
- H.265、H.264、MJPEG対応、WiseStreamII対応
- デイナイト (ICR) 、WDR (150dB/120dB)
- 縦表示モード (ホールウェイビュー)
- 映像&音声分析、オーディオの再生
- 内蔵ジャイロセンサーによるDISおよび衝撃検知
- モジュラー構造、PoE、12VDC
- IP52、IK10

Design and specifications are subject to change without notice. The latest product information / specification can be found at HanwhaVision.com
Hanwha Vision is formerly known as Hanwha Techwin.

FIRST EDITION © Hanwha Vision CO., LTD. All rights reserved.

XND-8081RV

5M H.265 ネットワーク IR付 ドームカメラ



Specifications

映像

Imaging Device	サイズ	1/1.8"
	タイプ	CMOS
解像度		2560x1920, 2560x1440, 1920x1080, 1600x1200, 1280x1024, 1280x960, 1280x720, 1024x768, 800x600, 800x448, 720x576, 720x480, 640x480, 640x360, 320x240
Max. Framerate	H.265/H.264	30fps/25fps(60Hz/50Hz)
	MJPEG	30fps
Min. Illumination (Lux)	Color(1/30sec, 30IRE)	0.07
	BW(1/30sec, 30IRE)	0.007
Video Out		CVBS: 1.0 Vp-p / 75Ω composite for installation, USB: Micro USB Type B. Preview and installation ONLY. Requires WiFi dongle.

レンズ

Focal Length (mm)		3.9~9.4
Zoom Ratio	Optical	2.4x
Max Aperture Ratio (F number)	Wide	1.3
視野角度	Horizontal	92.1°~38.7°
	Vertical	67.2°~29.0°
	Diagonal	119.9°~48.6°
Min. Object Distance		0.5m(1.64ft)
Focus Control		シンプルフォーカス
Lens Type		DC auto iris, P iris(IR corrected)

Pan / Tilt / Rotate

Pan / Tilt / Rotate Range	Pan	0°~360°
	Tilt	-45°~85°
	回転	0°~355°

技能

Day & Night	Auto(ICR)
Backlight Compensation	BLC, HLC , WDR, SSDR

Design and specifications are subject to change without notice. The latest product information / specification can be found at HanwhaVision.com
Hanwha Vision is formerly known as Hanwha Techwin.

FIRST EDITION © Hanwha Vision CO., LTD. All rights reserved.

技能

Wide Dynamic Range (dB)		120
Digital Noise Reduction		SSNR V
Digital Image Stabilization		Support(built-in gyro sensor)
曇り除去		サポート
モーション検知	Quantity	8ea
	Shape	8point Polygonal zones
Privacy Masking	Quantity	32ea
	Shape	Polygonal zones
	Color / Option	灰色, 緑, Red, 青, 黒, 白, モザイク
ゲイン制御		低, 中, 高
ホワイトバランス		ATW, AWC, 手動, 室内, 屋外
LDC		サポート
Electronic Shutter	モード	最小, 最大, アンチフリッカー
	Speed Range	2~1/12,000sec
ビデオ回転		FLIPモード, ミラー, Hallway view(90°/270°)
Alarm Interface	In/Out	Input 1ea, Output 1ea
Alarm Triggers		分析, ネットワーク切断, アラーム入力
Alarm Events When Alarm Trigger Occurred		File upload(image): e-mail/FTP, Notification: e-mail, Recording: SD/SDHC/SDXC or NAS recording at event triggers,アラーム出力, Handover: PTZ preset,Audio clip playback
オーディオ入力		Selectable(mic in/line in)
オーディオ出力		Line out
Light Type		IR LED
Light Viewable Length	IR	50m(164.04ft)
IR Wavelength		850nm

分析

分析イベント	通常	焦点ぼけ検知, モーション検知, タンパリング, フォグ検出, 顔検出, 音声検出, サウンド分類, 衝撃検知, Virtual area(Lotering, Intrusion, Enter/Exit, Appear/Disappear), Virtual line(Crossing, Direction) , デジタルオートトラッキング
Business Intelligence	通常	人数カウント, キュー管理, ヒートマップ

ネットワーク

Ethernet	RJ-45(10/100BASE-T)
映像圧縮	H.265/H.264: Main/Baseline/High, MJPEG
Audio Compression	G.711 u-law /G.726 selectable,G.726(ADPCM) 8kHz,G.711 8kHz, G.726: 16kbps,24kbps,32kbps,40kbps, AAC-LC: 48kbps at 16kHz
Smart codec	手動, WiseStream II

Design and specifications are subject to change without notice. The latest product information / specification can be found at HanwhaVision.com
Hanwha Vision is formerly known as Hanwha Techwin.

FIRST EDITION © Hanwha Vision CO., LTD. All rights reserved.

ネットワーク

ビットレートコントロール		H.265/H.264: CBR or VBR, MJPEG: VBR
Streaming	Unicast	最大 20ユーザー
	マルチキャスト	サポート
	Multiple Streaming	最大 10プロファイル
プロトコル		IPv4, IPv6, TCP/IP, UDP/IP, RTP(UDP), RTP(TCP), RTCP, RTSP, NTP, HTTP, HTTPS, SSL/TLS, DHCP, FTP, SMTP, ICMP, IGMP, SNMPv1/v2c/v3(MIB-2), ARP, DNS, DDNS, QoS, UPnP, Bonjour, LLDP, SRTP(TCP, UDP Unicast), PIM-SM
Application Programming Interface	ONVIF	s, G, T
	その他	SUNAPI(HTTP API), Hanwha Vision Open Platform
Direct Cloud Connection		Optional (needs gateway)

セキュリティ

ユーザー認証	ダイジェスト認証
Network authentication	IEEE 802.1X(EAP-TLS, EAP-LEAP)
Secure Communication	HTTPS
Access Control	IP-based access control
Data Protect	Encryption credentials, Encrypt compress for live recording file export
Audit	Access / System / Event Log management

一般

メモリ	RAM	1GB
	フラッシュ	256MB
Edge Storage	Micro SD/SDHC/SDXC	Max. 256GB x 2slot(Total 512GB)

Environmental & Electrical

動作条件	温度	-25°C~+60°C(-13°F~+140°F)
	湿度	0~90% RH(non-condensing)
保管条件	温度	-50°C~+60°C(-58°F~+140°F)
	湿度	0~90% RH(non-condensing)
Input Voltage		PoE(IEEE802.3af, Class3), 12VDC
消費電力	PoE	Max. 12.95W, typical 10.1W
	12VDC	Max. 11.7W, typical 7.9W

Mechanical

カラー	白
材料	アルミニウム
RAL Code	RAL9003
Product Dimensions	ø160x125mm(6.30x4.92")
Product Weight	1.450g(3.20lb)

Design and specifications are subject to change without notice. The latest product information / specification can be found at HanwhaVision.com
Hanwha Vision is formerly known as Hanwha Techwin.

FIRST EDITION © Hanwha Vision CO., LTD. All rights reserved.

Certifications & Standards

環境	IEC 60529 IP52, IEC 62262 IK10

Design and specifications are subject to change without notice. The latest product information / specification can be found at HanwhaVision.com
Hanwha Vision is formerly known as Hanwha Techwin.

XND-8081RV

5M H.265 ネットワーク IR付 ドームカメラ



CAD

Unit: mm [inch]

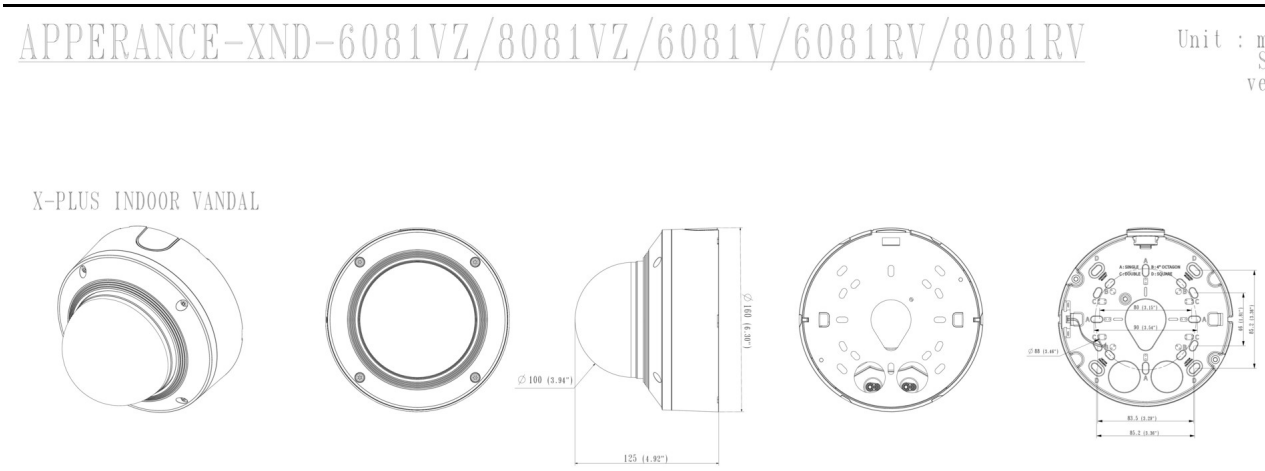

Design and specifications are subject to change without notice. The latest product information / specification can be found at HanwhaVision.com
Hanwha Vision is formerly known as Hanwha Techwin.

FIRST EDITION © Hanwha Vision CO., LTD. All rights reserved.

Compatible Devices



SBP-300LMW



SBP-300WMW1

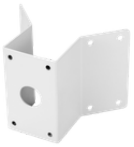

SBP-300KMW



SBP-300BW



SBP-300PMW



SBP-300WMW



SPB-IND85W



SBC-160B



SBP-300NBW



SBP-300CMW



SBP-167HMW

Design and specifications are subject to change without notice. The latest product information / specification can be found at HanwhaVision.com
Hanwha Vision is formerly known as Hanwha Techwin.

FIRST EDITION © Hanwha Vision CO., LTD. All rights reserved.