Hanwha Vision



Network Dome

# XND-8081VZ

## 5MP Vandal-Resistant Indoor Network Dome PTRZ Camera

## Key Features

- 5 megapixel resolution
- 3.6~9.4mm 2.6x motorized varifocal lens with PTRZ
- 30fps@all resolutions (H.265/H.264)
- H.265, H.264, MJPEG codec supported, multiple streaming
- Day & Night (ICR), WDR (120dB), Defog
- Shock detection, Loitering, Directional detection, Fog detection, Audio detection, Digital auto tracking, Sound classification, Tampering
- Motion detection, Handover, Audio event playback
- Dual SD/SDHC/SDXC memory slots (Max. 512GB)
- Hallway view, WiseStream II support, IP52, IK10,
- LDC support (Lens Distortion Correction)
- PoE / 12V DC, Bi-directional audio support
- White camera with ivory skin included

Design and specifications are subject to change without notice. The latest product information / specification can be found at HanwhaVision.com
Hanwha Vision is formerly known as Hanwha Techwin.

© Hanwha Vision CO., LTD. All rights reserved.

# XND-8081VZ

5MP Vandal-Resistant Indoor Network Dome PTRZ Camera



## Specifications

### Video

| | | |
|---|---|---|
| **Imaging Device** | Size | 1/1.8" |
| | Type | CMOS |
| **Resolution** | | 2560x1920, 2560x1440, 1920x1080, 1600x1200, 1280x1024, 1280x960, 1280x720, 1024x768, 800x600, 800x448, 720x576, 720x480, 640x480, 640x360, 320x240 |
| **Max. Framerate** | H.265/H.264 | 30fps/25fps(60Hz/50Hz) |
| | MJPEG | 30fps(@5MP Max. 5fps) |
| **Min. Illumination (Lux)** | Color(1/30sec, 30IRE) | 0.07 |
| | BW(1/30sec, 30IRE) | 0.007 |
| **Video Out** | | USB: Micro USB Type B. Preview and installation ONLY. Requires WiFi dongle. |

### Lens

| | | |
|---|---|---|
| **Focal Length (mm)** | | 3.6~9.4 |
| **Zoom Ratio** | Optical | 2.6x |
| **Max Aperture Ratio (F number)** | Wide | 1.2 |
| | Tele | 2.4 |
| **Angular Field of View** | Horizontal | 102.5°~38.7° |
| | Vertical | 74.2°~29.0° |
| | Diagonal | 135.5°~48.6° |
| **Min. Object Distance** | | 0.5m(1.64ft) |
| **Focus Control** | | Simple focus, Manual |
| **Lens Type** | | DC auto iris, P iris(IR corrected) |

### Pan / Tilt / Rotate

| | | |
|---|---|---|
| **Pan / Tilt / Rotate Range** | Pan | -175°~175° |
| | Tilt | 0°~85° |
| | Rotate | -175°~175° |
| | Others | Remote adjustment(Max. 200cycles) |

### Operational

| | |
|---|---|
| **Day & Night** | Auto(ICR) |

Design and specifications are subject to change without notice. The latest product information / specification can be found at HanwhaVision.com
Hanwha Vision is formerly known as Hanwha Techwin.

© Hanwha Vision CO., LTD. All rights reserved.

## Operational

| | | |
|---|---|---|
| **Backlight Compensation** | | BLC, HLC, WDR, SSDR |
| **Wide Dynamic Range (dB)** | | 120 |
| **Digital Noise Reduction** | | SSNR V |
| **Digital Image Stabilization** | | Support |
| **Defog** | | Support |
| **Motion Detection** | Quantity | 8ea |
| | Shape | 8point Polygonal zones |
| **Privacy Masking** | Quantity | 32ea |
| | Shape | 4point Quadrangle zones |
| | Color / Option | Gray, Green, Red, Blue, Black, White, Mosaic |
| **Gain Control** | | Support |
| **White Balance** | | ATW, AWC, Manual, Indoor, Outdoor |
| **LDC** | | Support |
| **Electronic Shutter** | Mode | Minimum, Maximum, Anti flicker |
| | Speed Range | 2~1/12,000sec |
| **Video Rotation** | | Flip, Mirror, Hallway view(90°/270°) |
| **Alarm Interface** | In/Out | Input 1ea, Output 1ea |
| **Alarm Triggers** | | Analytics, Network disconnect, Alarm input |
| **Alarm Events When Alarm Trigger Occurred** | | File upload(image): e-mail/FTP,<br>Notification: e-mail,<br>Recording: SD/SDHC/SDXC or NAS recording at event triggers,Alarm output,<br>Handover: PTZ preset,Audio clip playback |
| **Audio In** | | Selectable(mic in/line in) |
| **Audio Out** | | Line out |

## Analytics

| | | |
|---|---|---|
| **Analytics Events** | Normal | Defocus detection, Motion detection, Tampering, Fog detection, Face detection, Audio detection, Sound classification, Shock detection, Virtual area(Lotering, Intrusion, Enter/Exit, Appear/Disappear), Virtual line(Crossing, Direction) , Digital auto tracking |
| **Business Intelligence** | Normal | People counting, Queue management, Heatmap |

## Network

| | |
|---|---|
| **Ethernet** | RJ-45(10/100BASE-T) |
| **Video Compression** | H.265/H.264: Main/Baseline/High, MJPEG |
| **Audio Compression** | G.711 u-law /G.726 selectable,G.726(ADPCM) 8kHz,G.711 8kHz,<br>G.726: 16kbps,24kbps,32kbps,40kbps,<br>AAC-LC: 48kbps at 16kHz |
| **Smart Codec** | Manual, WiseStream II |
| **Bitrate Control** | H.265/H.264: CBR or VBR,<br>MJPEG: VBR |

Design and specifications are subject to change without notice. The latest product information / specification can be found at HanwhaVision.com
Hanwha Vision is formerly known as Hanwha Techwin.

© Hanwha Vision CO., LTD. All rights reserved.

## Network

| | | |
|---|---|---|
| **Streaming** | Unicast | Up to 20 users |
| | Multicast | Support |
| | Multiple Streaming | Up to 10 profiles |
| **Protocol** | | IPv4, IPv6, TCP/IP, UDP/IP, RTP(UDP), RTP(TCP), RTCP, RTSP, NTP, HTTP, HTTPS, SSL/TLS, DHCP, FTP, SMTP, ICMP, IGMPv2, SNMPv1/v2c/v3(MIB-2), ARP, DNS, DDNS, QoS, UPnP, Bonjour, LLDP, SRTP(TCP, UDP Unicast), PIM-SM |
| **Application Programming Interface** | ONVIF | S, G, T |
| | Others | SUNAPI(HTTP API), Hanwha Vision Open Platform |
| **Direct Cloud Connection** | | Optional (needs gateway) |

## Security

| | |
|---|---|
| **User authentication** | Digest authentication |
| **Network authentication** | IEEE 802.1X(EAP-TLS, EAP-LEAP) |
| **Secure Communication** | HTTPS, SRTP |
| **Access Control** | IP-based access control |
| **Data Protect** | Encryption credentials, Encrypt compress for live recording file export |
| **Audit** | Access / System / Event Log management |

## General

| | | |
|---|---|---|
| **Memory** | RAM | 1GB |
| | Flash | 256MB |
| **Edge Storage** | Micro SD/SDHC/SDXC | Max. 256GB x 2slot(Total 512GB) |

## Environmental & Electrical

| | | |
|---|---|---|
| **Operating Condition** | Temperature | -25°C~+60°C(-13°F~+140°F) |
| | Humidity | 0~90% RH(non-condensing) |
| **Storage Condition** | Temperature | -50°C~+60°C(-58°F~+140°F) |
| | Humidity | 0~90% RH(non-condensing) |
| **Input Voltage** | | PoE(IEEE802.3af, Class3), 12VDC |
| **Power Consumption** | PoE | Max 11W, typical 5.40W |
| | 12VDC | Max 9W, typical 3.75W |

## Mechanical

| | |
|---|---|
| **Color** | White |
| **Material** | Aluminum |
| **RAL Code** | RAL9003 |
| **Product Dimensions** | Ø160x125mm(Ø6.3x4.9") |
| **Product Weight** | 1.450g(3.20lb) |

Design and specifications are subject to change without notice. The latest product information / specification can be found at HanwhaVision.com
Hanwha Vision is formerly known as Hanwha Techwin.

© Hanwha Vision CO., LTD. All rights reserved.

## Certifications & Standards

| | |
|---|---|
| **Environment** | IEC 60529 IP52, IEC 62262 IK10 |

Design and specifications are subject to change without notice. The latest product information / specification can be found at HanwhaVision.com
Hanwha Vision is formerly known as Hanwha Techwin.

© Hanwha Vision CO., LTD. All rights reserved.

# XND-8081VZ

5MP Vandal-Resistant Indoor
Network Dome PTRZ Camera



## CAD

**Unit:** mm [inch]

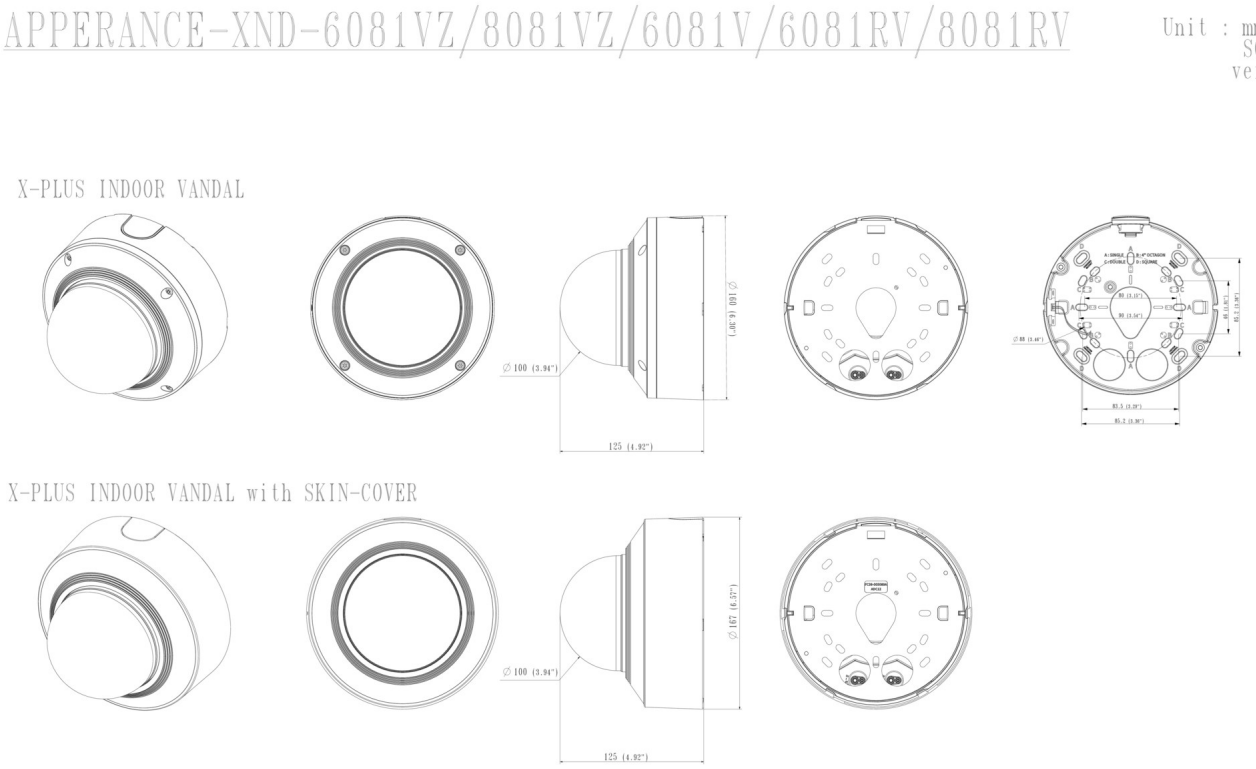


Design and specifications are subject to change without notice. The latest product information / specification can be found at HanwhaVision.com
Hanwha Vision is formerly known as Hanwha Techwin.

© Hanwha Vision CO., LTD. All rights reserved.