

Network Dome

XND-8081VZ

5M H.265 ネットワーク ドームカメラ

Key Features

- 最大5MPの解像度
- 0.07Lux@F1.4 (カラー) 、0.007Lux@F1.4 (白黒)
- H.265、H.264、MJPEG対応、WiseStreamII対応
- デイナイト (ICR) 、WDR (150dB/120dB)
- モジュラー構造
- 縦表示モード (ホールウェイビュー)
- 映像&音声分析、オーディオの再生
- 内蔵ジャイロセンサーによるDISおよび衝撃検知
- IP52/IK10、PoE、12VDC

Design and specifications are subject to change without notice. The latest product information / specification can be found at HanwhaVision.com
Hanwha Vision is formerly known as Hanwha Techwin.

© Hanwha Vision CO., LTD. All rights reserved.

XND-8081VZ

5M H.265 ネットワーク ドームカメラ



Specifications

映像

Imaging Device	サイズ	1/1.8"
	タイプ	CMOS
解像度		2560x1920, 2560x1440, 1920x1080, 1600x1200, 1280x1024, 1280x960, 1280x720, 1024x768, 800x600, 800x448, 720x576, 720x480, 640x480, 640x360, 320x240
Max. Framerate	H.265/H.264	30fps/25fps(60Hz/50Hz)
	MJPEG	30fps(@5MP Max. 5fps)
Min. Illumination (Lux)	Color(1/30sec, 30IRE)	0.07
	BW(1/30sec, 30IRE)	0.007
Video Out		USB: Micro USB Type B. Preview and installation ONLY. Requires WiFi dongle.

レンズ

Focal Length (mm)		3.6~9.4
Zoom Ratio	Optical	2.6x
Max Aperture Ratio (F number)	Wide	1.2
	Tele	2.4
視野角度	Horizontal	102.5°~38.7°
	Vertical	74.2°~29.0°
	Diagonal	135.5°~48.6°
Min. Object Distance		0.5m(1.64ft)
Focus Control		シンプルフォーカス, 手動
Lens Type		DC auto iris, P iris(IR corrected)

Pan / Tilt / Rotate

Pan / Tilt / Rotate Range	Pan	-175°~175°
	Tilt	0°~85°
	回転	-175°~175°
	その他	Remote adjustment(Max. 200cycles)

技能

Day & Night	Auto(ICR)

Design and specifications are subject to change without notice. The latest product information / specification can be found at HanwhaVision.com
Hanwha Vision is formerly known as Hanwha Techwin.

© Hanwha Vision CO., LTD. All rights reserved.

技能

Backlight Compensation		BLC, HLC , WDR, SSDR
Wide Dynamic Range (dB)		120
Digital Noise Reduction		SSNR V
Digital Image Stabilization		サポート
曇り除去		サポート
モーション検知	Quantity	8ea
	Shape	8point Polygonal zones
Privacy Masking	Quantity	32ea
	Shape	4point Quadrangle zones
	Color / Option	灰色, 緑, Red, 青, 黒, 白, モザイク
ゲイン制御		サポート
ホワイトバランス		ATW, AWC, 手動, 室内, 屋外
LDC		サポート
Electronic Shutter	モード	最小, 最大, アンチフリッカー
	Speed Range	2~1/12,000sec
ビデオ回転		FLIPモード, ミラー, Hallway view(90°/270°)
Alarm Interface	In/Out	Input 1ea, Output 1ea
Alarm Triggers		分析, ネットワーク切断, アラーム入力
Alarm Events When Alarm Trigger Occurred		File upload(image): e-mail/FTP, Notification: e-mail, Recording: SD/SDHC/SDXC or NAS recording at event triggers,アラーム出力, Handover: PTZ preset,Audio clip playback
オーディオ入力		Selectable(mic in/line in)
オーディオ出力		Line out

分析

分析イベント	通常	焦点ぼけ検知, モーション検知, タンパリング, フォグ検出, 顔検出, 音声検出, サウンド分類, 衝撃検知, Virtual area(Lotering, Intrusion, Enter/Exit, Appear/Disappear), Virtual line(Crossing, Direction) , デジタルオートトラッキング
Business Intelligence	通常	人数カウント, キュー管理, ヒートマップ

ネットワーク

Ethernet	RJ-45(10/100BASE-T)
映像圧縮	H.265/H.264: Main/Baseline/High, MJPEG
Audio Compression	G.711 u-law /G.726 selectable,G.726(ADPCM) 8kHz,G.711 8kHz, G.726: 16kbps,24kbps,32kbps,40kbps, AAC-LC: 48kbps at 16kHz
Smart codec	手動, WiseStream II
ビットレートコントロール	H.265/H.264: CBR or VBR, MJPEG: VBR

Design and specifications are subject to change without notice. The latest product information / specification can be found at HanwhaVision.com
Hanwha Vision is formerly known as Hanwha Techwin.

© Hanwha Vision CO., LTD. All rights reserved.

ネットワーク

Streaming	Unicast	最大 20ユーザー
	マルチキャスト	サポート
	Multiple Streaming	最大 10プロファイル
プロトコル		IPv4, IPv6, TCP/IP, UDP/IP, RTP(UDP), RTP(TCP), RTCP, RTSP, NTP, HTTP, HTTPS, SSL/TLS, DHCP, FTP, SMTP, ICMP, IGMP, SNMPv1/v2c/v3(MIB-2), ARP, DNS, DDNS, QoS, UPnP, Bonjour, LLDP, SRTP(TCP, UDP Unicast), PIM-SM
Application Programming Interface	ONVIF	s, G, T
	その他	SUNAPI(HTTP API), Hanwha Vision Open Platform
Direct Cloud Connection		Optional (needs gateway)

セキュリティ

ユーザー認証	ダイジェスト認証
Network authentication	IEEE 802.1X(EAP-TLS, EAP-LEAP)
Secure Communication	HTTPS, SRTP
Access Control	IP-based access control
Data Protect	Encryption credentials, Encrypt compress for live recording file export
Audit	Access / System / Event Log management

一般

メモリ	RAM	1GB
	フラッシュ	256MB
Edge Storage	Micro SD/SDHC/SDXC	Max. 256GB x 2slot(Total 512GB)

Environmental & Electrical

動作条件	温度	-25°C~+60°C(-13°F~+140°F)
	湿度	0~90% RH(non-condensing)
保管条件	温度	-50°C~+60°C(-58°F~+140°F)
	湿度	0~90% RH(non-condensing)
Input Voltage		PoE(IEEE802.3af, Class3), 12VDC
消費電力	PoE	Max 11W, typical 5.40W
	12VDC	Max 9W, typical 3.75W

Mechanical

カラー	白
材料	アルミニウム
RAL Code	RAL9003
Product Dimensions	Ø160x125mm(Ø6.3x4.9")
Product Weight	1.450g(3.20lb)

Design and specifications are subject to change without notice. The latest product information / specification can be found at HanwhaVision.com
Hanwha Vision is formerly known as Hanwha Techwin.

© Hanwha Vision CO., LTD. All rights reserved.

Certifications & Standards

環境	IEC 60529 IP52, IEC 62262 IK10

Design and specifications are subject to change without notice. The latest product information / specification can be found at HanwhaVision.com
Hanwha Vision is formerly known as Hanwha Techwin.

© Hanwha Vision CO., LTD. All rights reserved.

XND-8081VZ

5M H.265 ネットワーク ドームカメラ



CAD

Unit: mm [inch]

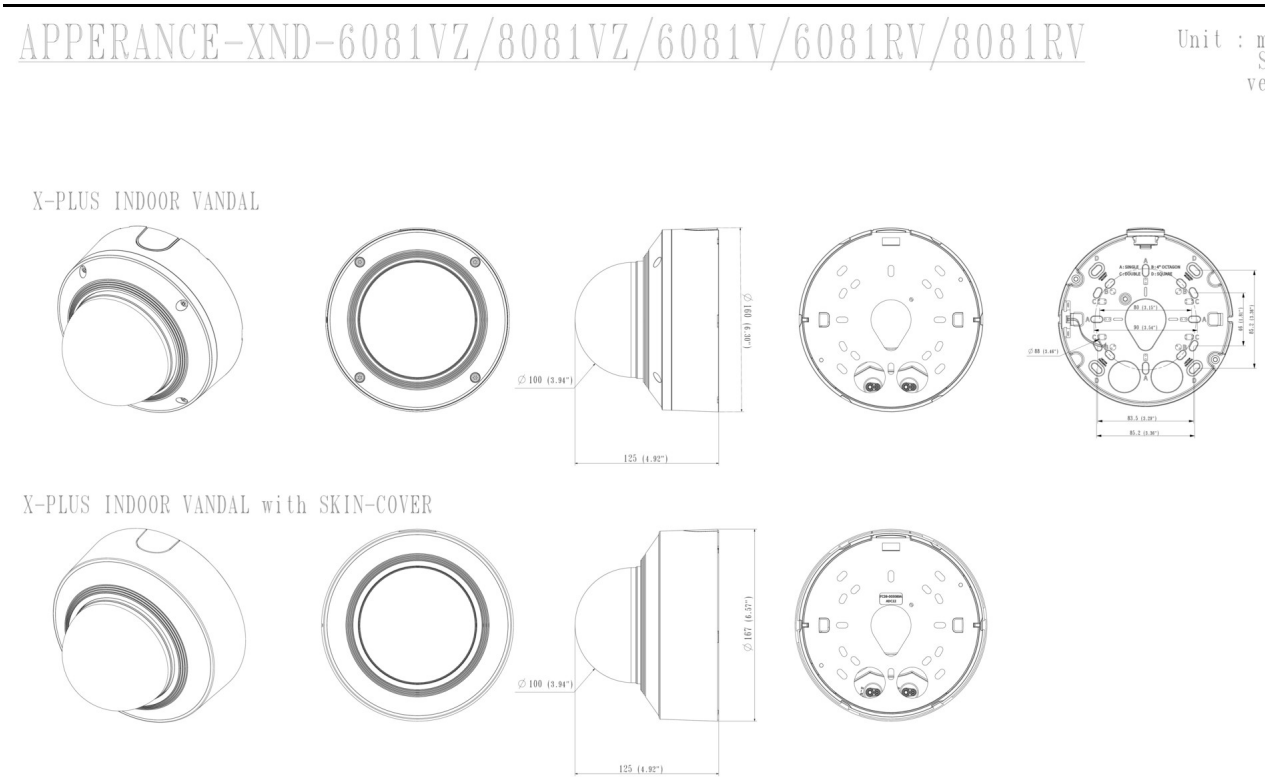

Design and specifications are subject to change without notice. The latest product information / specification can be found at HanwhaVision.com
Hanwha Vision is formerly known as Hanwha Techwin.

© Hanwha Vision CO., LTD. All rights reserved.

Compatible Devices



SBP-300LMW



SBP-300WMW1

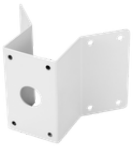

SBP-300KMW



SBP-300BW



SBP-300PMW



SBP-300WMW



SPB-IND85W



SBC-160B



SBP-300NBW



SBP-300CMW



SBP-167HMW

Design and specifications are subject to change without notice. The latest product information / specification can be found at HanwhaVision.com
Hanwha Vision is formerly known as Hanwha Techwin.

© Hanwha Vision CO., LTD. All rights reserved.